United Kingdom
en

BAXI

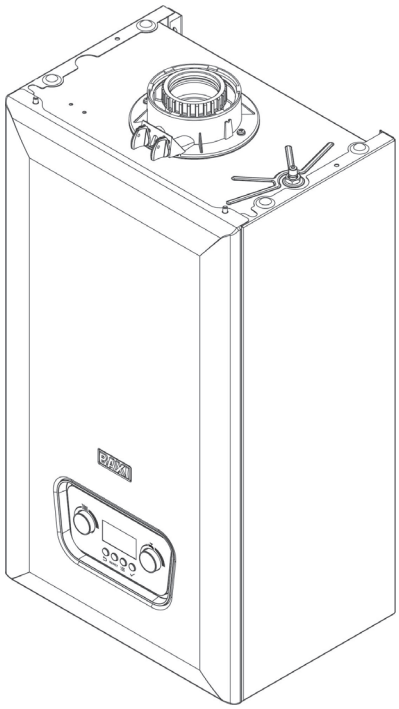

Installation and Service Manual & Boiler Fiche

High-efficiency wall-hung condensing gas boiler

800 Combi 2

24 - 30 - 36

These instructions include the Benchmark Commissioning Checklist and should be left with the user for safe keeping.They must be read in conjunction with the Flue Installation Guide.

Dear Customer,

Thank you very much for buying this appliance.

Please read through the manual carefully before using the product, and keep it in a safe place for later reference. In order to ensure continued safe and efficient operation we recommend that the product is serviced regularly. Our service and customer service organisation can assist with this.

We hope you enjoy years of problem-free operation with the product.

Contents

1 Safety . . . 6
1.1 Benchmark . . . 6
1.1.1 Building regulations and the benchmark commissioning checklist. . . . 6
1.1.2 The benchmark scheme . . . 6
1.1.3 Installer notification guidelines . . . 7
1.2 General safety instructions . . . 8
1.3 Recommendations . . . 8
1.4 Specific safety instructions . . . 9
1.4.1 Handling . . . 9
1.5 Liabilities . . . 10
1.5.1 Manufacturer's liability . . . 10
1.5.2 Installer's liability . . . 10
1.5.3 User's liability . . . 10

2 About this manual . . . 11
2.1 General . . . 11
2.2 Additional documentation . . . 11
2.3 Symbols used . . . 11
2.3.1 Symbols used in the manual . . . 11
2.4 Abbreviations/glossary. . . . 11

3 Technical specifications . . . 12
3.1 Homologations . . . 12
3.1.1 Safety, performance & quality . . . 12
3.1.2 Certifications . . . 12
3.1.3 Gas category . . . 12
3.1.4 Standards . . . 12
3.2 Technical data . . . 13
3.2.1 Technical information . . . 13
3.2.2 Features of the temperature sensors . . . 16
3.3 Dimensions and connections . . . 16
3.4 Electrical diagram . . . 18

4 Description of the product . . . 19
4.1 General description . . . 19
4.2 Operating principle . . . 19
4.2.1 Air-gas adjustment . . . 19
4.2.2 Combustion . . . 19
4.2.3 Heating and domestic hot water production . . . 19
4.2.4 Schematic diagram . . . 20
4.3 Main components..... . . . 20
4.4 Control panel description . . . 21
4.4.1 Description of the control panel . . . 21
4.5 Contents of the package . . . 21
4.6 Accessories & options . . . 21

5 Before installation . . . 22
5.1 Installation standards and rules . . . 22
5.2 Installation requirements . . . 22
5.2.1 Gas supply. . . . 22
5.2.2 Electrical supply . . . 22
5.2.3 Hard water area . . . 23
5.2.4 Bypass . . . 23
5.2.5 System control . . . 23
5.2.6 Treatment of water circulating systems . . . 23
5.2.7 Showers . . . 24
5.2.8 Expansion vessel (CH only) . . . 24
5.2.9 Safety pressure relief valve . . . 24
5.3 Flow rate/head at the plate characteristics . . . 25

5.4 Choice of the location . . . 26
5.4.1 Location of the boiler . . . 26
5.4.2 Bath and shower rooms . . . 26
5.4.3 Ventilation . . . 27
5.4.4 Condensate drain . . . 27
5.4.5 Clearances . . . 29
5.4.6 Flue/chimney location . . . 29
5.4.7 Horizontal flue/chimney systems. . . . 31
5.4.8 Flue/chimney trim . . . 34
5.4.9 Terminal guard . . . 34
5.4.10 Flue/chimney deflector . . . 34
5.4.11 Flue/chimney accessories . . . 34
5.4.12 Data plate and boiler service level . . . 34
5.5 Transport . . . 35
5.6 Unpacking and initial preparation . . . 36
5.6.1 Unpacking . . . 36
5.6.2 Initial preparation . . . 37
5.7 Connecting diagrams . . . 37
5.7.1 Filling information . . . 37
5.7.2 Domestic hot water circuit . . . 38

6 Installation . . . 39
6.1 General . . . 39
6.2 Assembly . . . 39
6.2.1 Fitting the pressure relief discharge pipe. . . . 39
6.2.2 Connecting the condensate drain . . . 40
6.3 Air supply/flue gas connection . . . 40
6.3.1 Connecting the flue/chimney . . . 40
6.4 Electrical connections . . . 42
6.4.1 Accessing the electrical connections . . . 42
6.4.2 Connecting the room thermostat . . . 42
6.4.3 Service connection (SERVICE) . . . 43
6.4.4 Connecting on wall outdoor sensor. . . . 43
6.4.5 Connecting the outside sensor. . . . 43
6.4.6 Identifying label . . . 43
6.5 Filling the installation . . . 44
6.5.1 Flushing the system . . . 44
6.5.2 Filling the installation . . . 44
6.5.3 Filling the condensate trap. . . . 44
6.6 Draining the installation . . . 44

7 Commissioning . . . 45
7.1 General . . . 45
7.2 Checklist before commissioning . . . 45
7.3 Commissioning procedure . . . 45
7.4 Gas settings . . . 46
7.4.1 Checking the working gas inlet pressure and gas rate. . . . 46
7.4.2 Combustion parameters. . . . 46
7.4.3 LPG conversion procedure. . . . 48
7.4.4 Service settings . . . 50
7.4.5 Adjusting the gas valve . . . 51
7.5 Final instructions . . . 52
7.5.1 Handover . . . 52

8 Operation . . . 53
8.1 Use of the control panel . . . 53
8.1.1 Browsing the menus . . . 53
8.1.2 Running the automatic detection function . . . 53
8.1.3 Information menu display. . . . 53
8.1.4 Counter menu display. . . . 53

8.2 Start-up . . . 54
8.2.1 Procedure for first start-up . . . 54
8.2.2 Changing the heating flow temperature . . . 54
8.2.3 Changing the domestic hot water (DHW) temperature . . . 54
8.3 Shutdown . . . 55
8.3.1 Switching off the heating and domestic hot water (DHW) . . . 55
8.4 Deaeration function . . . 55
8.5 Frost protection . . . 55

9 Settings . . . 56
9.1 Accessing the settings . . . 56
9.2 List of parameters . . . 56
9.2.1 Resetting factory settings . . . 57
9.3 Setting the parameters . . . 57
9.3.1 Setting the heating curve . . . 57
9.4 Reading out measured values . . . 58
9.4.1 Statuses and sub-statuses . . . 59
9.5 Reading counters . . . 61

10 Maintenance . . . 62
10.1 General . . . 62
10.2 Maintenance message . . . 63
10.2.1 Service notification . . . 63
10.2.2 Resetting the displayed maintenance message . . . 63
10.2.3 Resetting the upcoming maintenance message . . . 63
10.3 Periodic check and maintenance procedure . . . 64
10.3.1 Annual servicing . . . 64
10.3.2 Checking the water pressure . . . 64
10.3.3 Checking the expansion vessel . . . 64
10.3.4 Checking the flue gas discharge and the air supply . . . 65
10.3.5 Checking the combustion . . . 65
10.3.6 Checking the automatic air vent . . . 65
10.3.7 Cleaning the siphon . . . 65
10.3.8 Electrode distances . . . 65
10.3.9 Checking the burner and cleaning the heat exchanger . . . 66
10.3.10 Water unit . . . 67
10.3.11 Cleaning/replacing the DHW filter . . . 67
10.3.12 Removing limescale . . . 67
10.4 Specific maintenance operations . . . 68
10.4.1 Detection/ignition electrode replacement . . . 68
10.4.2 Dismantling the water-water exchanger . . . 68
10.4.3 Flow and return sensors . . . 68
10.4.4 Replacing the return valve . . . 69
10.4.5 Replacing the 3-way valve . . . 69
10.4.6 Pressure sensor . . . 69
10.4.7 Hall effect sensor . . . 70
10.4.8 Safety pressure relief valve . . . 70
10.4.9 Diverter valve motor . . . 70
10.4.10 Pump replacement . . . 71
10.4.11 Replacing the expansion vessel . . . 71
10.4.12 Replacing the PCB . . . 71
10.4.13 Setting an uncalibrated gas valve . . . 72

11 Troubleshooting . . . 73
11.1 Temporary and permanent faults . . . 73
11.2 Error codes . . . 73

12 Decommissioning . . . 78
12.1 Disassembly . . . 78
12.2 Recommissioning . . . 78

13 Disposal . . . 79
13.1 Disposal and recycling . . . 79

1 Safety

1.1 Benchmark

1.1.1 Building Regulations and the Benchmark Commissioning Checklist

Building Regulations (England & Wales) require notification of the installation of a heating appliance to the relevant Local Authority Building Control Department. This can be achieved via a Competent Persons Self Certification Scheme as an option to notifying the Local Authority directly.

The Health & Safety Executive operates the 'Gas Safe Register', a self certification scheme for gas heating appliances.

This company is a member of the Benchmark initiative and fully supports the aims of the programme. Its aim is to improve the standards of installation and commissioning of central heating systems in the UK and to encourage the regular servicing of all central heating systems to ensure safety and efficiency.

Building Regulations require that installations should comply with manufacturer's instructions. It is therefore important that the commissioning checklist is completed by the installer. The relevant section of Building Regulations only relates to dwellings. Therefore the checklist only applies if the appliance is being installed in a dwelling or some related structure.

The flowchart in 1.1.3 gives guidance for installers on the process necessary to ensure compliance with Building Regulations.

1.1.2 The Benchmark Scheme

Fig.1 Benchmark

AD-3000725-01

Benchmark places responsibilities on both manufacturers and installers. The purpose is to ensure that customers are provided with the correct equipment for their needs, that it is installed, commissioned and serviced in accordance with the manufacturer's instructions by competent persons and that it meets the requirements of the appropriate Building Regulations. The Benchmark Checklist can be used to demonstrate compliance with Building Regulations and should be provided to the customer for future reference.

Installers are required to carry out installation, commissioning and servicing work in accordance with the Benchmark Code of Practice which is available from the Heating and Hotwater Industry Council who manage and promote the Scheme. Visit **www.centralheating.co.uk for more information.**

1.1.3 Installer Notification Guidelines

Fig.2 Installer Notification Guidelines

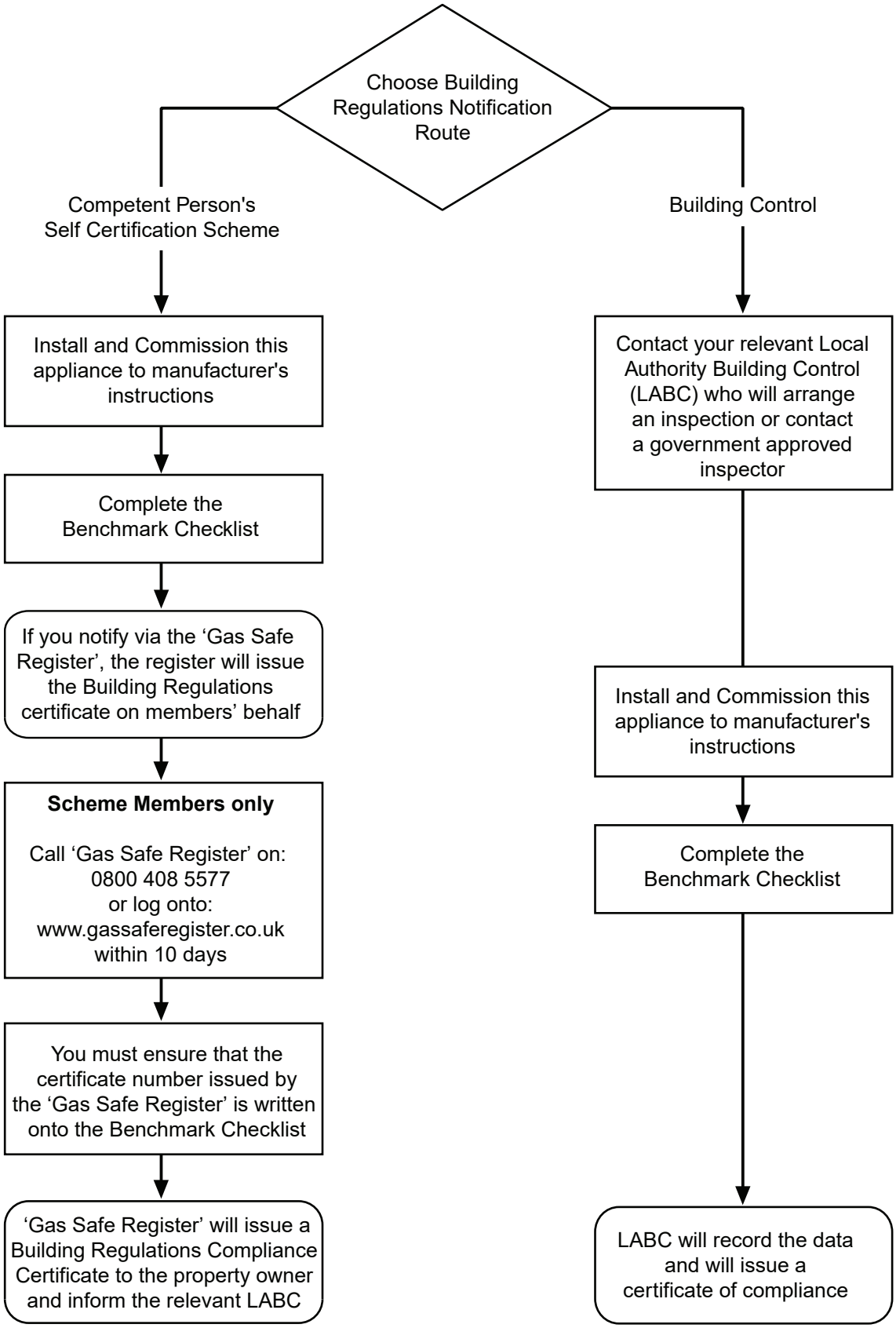

1.2 General safety instructions

Danger
This boiler can be used by children aged 8 years and above and by persons with reduced physical, sensory or mental capabilities or lack of experience and knowledge when they have been given supervision or instruction concerning the safe use of the device and understand the resulting risks. Children must not be allowed to play with the appliance. Cleaning and user maintenance must not be carried out by children without supervision.

Danger
If you smell gas:

1. Do not use a naked flame, do not smoke, do not operate electrical contacts or switches (doorbell, light, motor, lift, etc.).
2. Shut off gas supply.
3. Open the windows.
4. Trace possible leaks and seal them immediately.
5. If the gas leak is before the gas meter, contact the supplier
6. Telephone the National Gas Emergency Service on:- 0800 111 999.

Danger
If you smell flue gases:

1. Switch off the boiler.
2. Open the windows.
3. Trace possible leaks and seal them immediately.

Warning
Do not touch the flue gas pipes. Depending on the boiler settings, the temperature of the flue gas pipes may exceed 60 ºC.

Warning
Do not touch the radiators for long periods. Depending on the boiler settings, the temperature of the radiators may exceed 60 ºC.

Warning
Take precautions with the domestic hot water. Depending on the boiler settings, the domestic hot water temperature may exceed 65 ºC.

Danger
Before any work, switch off the mains supply to the boiler.

Caution
After maintenance or repair work, check the entire heating installation to ensure that there are no leaks.

1.3 Recommendations

Warning
Installation and maintenance of the boiler must be carried out by a qualified installer in accordance with local and national regulations.

Warning
If the mains lead is damaged, it must be replaced by the original manufacturer, the manufacturer's dealer or another suitably skilled person to prevent hazardous situations from arising.

Warning
Always disconnect the mains supply and close the main gas tap when working on the boiler.

Caution

Make sure the boiler can be reached at all times.
The boiler must be installed in a frost-free area.
In the case of a fixed connection to the power cord, you must always install a main double pole switch with an opening gap of at least 3 mm (EN 60335-1).
Drain the boiler and central heating system if you are not going to use your home for a long time and there is a chance of frost.
The frost protection does not work if the boiler is out of operation.
The boiler protection only protects the boiler, not the system.
Check the water pressure in the system regularly. If the water pressure is lower than 0.8 bar, the system must be topped up (recommended water pressure between 1 and 2 bar).

Important
Keep this document near to the boiler.

Important
Casing panels may only be removed for maintenance and servicing purposes. Refit all panels when maintenance work and servicing are complete.

Note
Instruction and warning labels must never be removed or covered and must be clearly legible throughout the entire service life of the boiler. Replace damaged or illegible instruction and warning labels immediately.

Note
The boiler must not be modified in any way.

1.4 Specific safety instructions

1.4.1 Handling

General

The following advice should be adhered to, from when first handling the boiler to the final stages of installation, and also during maintenance.
Most injuries as a result of inappropriate handling and lifting are to the back, but all other parts of the body are vulnerable, particularly shoulders, arms and hands. Health & Safety is the responsibility of EVERYONE.
There is no "safe" limit for one person - each person has different capabilities. The boiler should be handled and lifted by TWO PEOPLE.
Do not handle or lift unless you feel physically able.
Wear appropriate Personal Protection Equipment e.g. protective gloves, safety footwear etc.

Preparation

Co-ordinate movements - know where, and when, you are both going.
Minimise the number of times needed to move the boiler - plan ahead.
Always ensure when handling or lifting the route is clear and unobstructed. If possible avoid steps, wet or slippery surfaces, unlit areas etc. and take special care on ladders/into lofts.

Technique

When handling or lifting always use safe techniques - keep your back straight, bend your knees. Don’t twist - move your feet, avoid bending forwards and sideways and keep the load as close to your body as possible.
Where possible transport the boiler using a sack truck or other suitable trolley.

Always grip the boiler firmly, and before lifting feel where the weight is concentrated to establish the centre of gravity, repositioning yourself as necessary. See the "Installation" section of these instructions for recommended lift points.

Remember

The circumstances of each installation are different. Always assess the risks associated with handling and lifting according to the individual conditions.
If at any time when installing the boiler you feel that you may have injured yourself STOP !! DO NOT "work through" the pain - you may cause further injury.

IF IN ANY DOUBT DO NOT HANDLE OR LIFT THE BOILER — OBTAIN ADVICE OR ASSISTANCE BEFORE PROCEEDING !

1.5 Liabilities

1.5.1 Manufacturer's liability

Our products are manufactured in compliance with the requirements of the various Directives applicable. They are therefore delivered with the CE & UKCA marking and any documents necessary. In the interests of the quality of our products, we strive constantly to improve them. We therefore reserve the right to modify the specifications given in this document.

Our liability as manufacturer may not be invoked in the following cases:

Failure to abide by the instructions on installing the appliance.
Failure to abide by the instructions on using the appliance.
Faulty or insufficient maintenance of the appliance.

1.5.2 Installer's liability

The installer is responsible for the installation and initial commissioning of the appliance. The installer must observe the following instructions:

Read and follow the instructions given in the manuals provided with the appliance.
Install the appliance in compliance with prevailing legislation and standards.
Carry out initial commissioning and any checks necessary.
Explain the installation to the user.
If maintenance is necessary, warn the user of the obligation to check the appliance and keep it in good working order.
Give all the instruction manuals to the user.

1.5.3 User's liability

To guarantee optimum operation of the system, you must abide by the following instructions:

Read and follow the instructions given in the manuals provided with the appliance.
Call on a qualified professional to carry out installation and initial commissioning.
Get your installer to explain your installation to you.
Have the required inspections and maintenance carried out by a qualified installer.
Keep the instruction manuals in good condition close to the appliance.

2 About this manual

2.1 General

This manual is intended for installers and service engineers of Baxi 800 Combi 2 boilers.

2.2 Additional documentation

These Installation & Service Instructions must be read in conjunction with the Flue Accessories Fitting Guide supplied in the Literature Pack.

Various timers, external controls, etc. are available as optional extras. Full details are contained in the relevant sales literature.

2.3 Symbols used

2.3.1 Symbols used in the manual

This manual uses various danger levels to draw attention to special instructions. We do this to improve user safety, to prevent problems and to guarantee correct operation of the appliance.

Danger
Risk of dangerous situations that may result in serious personal injury.

Danger of electric shock
Risk of electric shock.

Warning
Risk of dangerous situations that may result in minor personal injury.

Caution
Risk of material damage.

Important
Please note: important information.

See
Reference to other manuals or pages in this manual.

2.4 Abbreviations/Glossary

BS	British Standard
CH	Central heating
DHW	Domestic hot water
GB	Great Britain
HHIC	Heating and Hotwater Industry Council
Hi	Lower heating value (LHV)
Hs	Higher heating value (HHV)
IE	Ireland
PCU	PCB for managing burner operation
Pn	Nominal output
Pnc	Condensing output
SU	Safety PCB

3 Technical specifications

3.1 Homologations

3.1.1 Safety, Performance & Quality

This boiler has been assessed by an appropriate Notified Body and shown to meet the requirements of all Directives and Regulations as applicable. These Directives and Regulations lay down requirements for the safety and efficiency of the appliance, together with its design, construction and use of materials. They also require the production process to be covered by an approved and monitored system of quality assurance.

3.1.2 Certifications

Tab.1 Certifications

CE certificate number	0085CU0338	UKCE certificate number	748353
NOx class	6		
Boiler type	C_{13}, C_{33}	G.C. nos. 824-2: 47-077-63 830-2: 47-077-64 836-2: 47-077-65	

3.1.3 Gas category

Tab.2 Gas category, type and supply pressure

Gas category	Gas type	Supply pressure (mbar)
I_{2H}	G20 (H natural gas)	20
I_{3P}	G31 (P LPG)	37

Important
This appliance is suitable for G20 gas containing up to 20% hydrogen (H_2). Due to variations in the percentage of H_2, the percentage of O_2 may vary over time. (For example: 20% of H_2 in the gas may lead to a 1.5% increase of O_2 in the flue gases) The gas valve may need to be adjusted more accurately. This must be adjusted using standard O_2 values for the gas used.

3.1.4 Standards

Codes of Practice — refer to the most recent version

Tab.3 In GB the following Codes of Practice apply:

Standard	Scope
BS 6891	Gas Installation.
BS 5546	Installation of hot water supplies for domestic purposes.
BS EN 12828	Heating systems in buildings.
BS EN 12831	Heating systems in buildings — Calculation of load.
BS EN 14336	Installation & commissioning of water based heating sys tems.
BS 6798	Installation of gas fired hot water boilers.
BS 5440 Part 1	Flues.
BS 5440 Part 2	Ventilation.

Standard	Scope
BS 7074	Expansion vessels and ancillary equipment for sealed wa ter systems.
BS 7593	Treatment of water in domestic hot water central heating systems.
BS 4814	Specification for Expansion Vessels using an internal dia phragm, for sealed hot water systems.
IGE/UP/ 7/1998	Guide for gas installations in timber framed housing.

Tab.4 In IE the following Code of Practice apply:

Standard	Scope
IS 813	Domestic Gas Installations.
The following standards give valuable additional information:	
BS 5546	Installation of hot water supplies for domestic purposes.
BS EN 12828	Heating systems in buildings.
BS EN 12831	Heating systems in buildings — Calculation of load.
BS EN 14336	Installation & commissioning of water based heating sys tems.
BS 7074	Expansion vessels and ancillary equipment for sealed wa ter systems.
BS 7593	Treatment of water in domestic hot water central heating systems.

3.2 Technical data

3.2.1 Technical information

Important
All data in these sections are nominal and subject to normal pro duction tolerances.

Tab.5 Technical settings for combination heaters with boilers

			24 Combi	30 Combi	36 Combi
Condensing boiler			Yes	Yes	Yes
Low-temperature boiler(1)			No	No	No
B1 boiler			No	No	No

Tab.5b PCDB Index

Model	PCDB Index no.
824-2	019082
830-2	019083
836-2	019084

			24 Combi	30 Combi	36 Combi
Cogeneration space heater			No	No	No
Combination heater			Yes	Yes	Yes
Rated heat output	*Prated*	kW	20	25	25
Useful heat output at rated heat output and high temperature setting (2)	*P4*	kW	20.0	25.0	25.0
Useful heat output at 30% of rated heat output and low temperature setting(1)	*P1*	kW	6.7	8.4	8.4
Seasonal space heating energy efficiency	*ηs*	%	94	94	94
Useful efficiency at rated heat output and high temperature setting(2)	*η4*	%	88.2	88.1	88.1
Useful efficiency at 30% of rated heat output and low temperature setting(1)	*η1*	%	99.0	98.8	98.8
Auxiliary electricity consumption					
Full load	*elmax*	kW	0.046	0.061	0.071
Partial load	*elmin*	kW	0.008	0.009	0.009
Standby mode	*PSB*	kW	0.004	0.004	0.004
Other items					
Heat loss on standby	*Pstby*	kW	0.04	0.04	0.04
Ignition burner power consumption	*Pign*	kW	0	0	0
Annual energy consumption	*QHE*	GJ	62	77	77
Sound power level, indoors	*LWA*	dB	50	51	51
Nitrogen oxide emissions	NOx	mg/kWh	32	31	31
Domestic hot water parameters					
Declared load profile			XL	XL	XL
Daily electricity consumption	*Qelec*	kWh	0.146	0.140	0.138
Annual electricity consumption	*AEC*	kWh	32	31	30
Water heating energy efficiency					
Daily fuel consumption	*Qfuel*	kWh	20.547	20.438	20.473
Annual fuel consumption	*AFC*	GJ	16	16	16

(1) Low temperature means for condensing boilers 30 °C, for low temperature boilers 37 °C and for other heaters 50 °C return temperature (at heater inlet).
(2) High temperature setting means 60 °C return temperature at boiler inlet and 80 °C flow temperature at boiler outlet.

Tab.6 General

		24 Combi	30 Combi	36 Combi
Rated heat input (Qn) for domestic hot water	kW	24.7	30.9	36.9
Rated heat input (Qn) for heating	kW	20.6	25.7	25.7
Reduced heat input (Qn) 80/60 °C	kW	4.9	6.0	7.4
Rated heat output (Pn) for domestic hot water	kW	24.0	30.0	36.0
Rated heat output (Pn) 80/60 °C for heating	kW	20	25	25
Rated heat output (Pn) 50/30 °C for heating	kW	21.8	27.1	27.1
Reduced heat output (Pn) 80/60 °C	kW	4.8	5.8	7.2
Reduced heat output (Pn) 50/30 °C	kW	5.2	6.3	7.6
Rated efficiency 50/30 °C (Hi)	%	105.8	105.8	105.8

		24 Combi	30 Combi	36 Combi
Rated heat input (Qn) for domestic hot water (G20+20%H2)	kW	23.6	29.5	35.1
Rated heat input (Qn) for heating (G20+20%H2)	kW	19.7	24.5	24.5

Tab.7 Characteristics of the heating circuit

		24 Combi	30 Combi	36 Combi
Maximum pressure	bar	2.5	2.5	2.5
Minimum pressure	bar	0.5	0.5	0.5
Temperature range for heating circuit	°C	25−80	25−80	25−80
Water capacity of expansion vessel	l	7	7	7

Tab.8 Characteristics of the domestic water circuit

		24 Combi	30 Combi	36 Combi
Minimum pressure	bar	0.8	0.8	0.8
Maximum pressure	bar	8.0	8.0	8.0
Minimum dynamic pressure	bar	0.15	0.15	0.15
Minimum water flow	l/min	2.0	2.0	2.0
Specific flow (D)	l/min	11.5	14.3	17.2
Temperature range for domestic water circuit	°C	35-60	35-60	35-60
Domestic water production with ΔT = 25 °C	l/min	14.1	17.6	21.0
Domestic water production with ΔT = 35 °C	l/min	10.2	12.2	15.0

Tab.9 Combustion characteristics

		24 Combi	30 Combi	36 Combi
G20 gas consumption (Qmax)	m^3/h	2.61	3.26	3.9
G20 gas consumption (Qmin)	m^3/h	0.52	0.63	0.78
Diameter of coaxial discharge pipes	mm	60/100	60/100	60/100
Flue gas mass flow rate (max)	kg/sec	0.011	0.014	0.017
Flue gas mass flow rate (min)	kg/sec	0.002	0.003	0.004

		24 Combi	30 Combi	36 Combi
G31 (LPG) gas consumption (Qmax)	kg/h	1.92	2.4	2.86
G31 (LPG) gas consumption (Qmin)	kg/h	0.38	0.47	0.58

Tab.10 Electrical characteristics

		24 Combi	30 Combi	36 Combi
Power supply voltage	V	230	230	230
Power supply frequency	Hz	50	50	50
Rated electric power	W	85	88	91

Tab.11 Other characteristics

		24 Combi	30 Combi	36 Combi
Humidity protection rating (EN 60529)	IP	X5D	X5D	X5D
Net weight when empty/filled with water	kg	28/30	29/31	30/31
Dimensions (height/width/depth)	mm	700/395/285	700/395/285	700/395/285

3.2.1 Features of the temperature sensors

Tab.12 Temperature sensor outdoor sensor (NTC1000 Beta 3688 1 kOhm@25 °C)

Temperature [°C]	-20	-16	-12	-8	-4	0	4	8	12	16	20	24
Resistance [Ω]	7578	6166	5046	4152	3435	2857	2387	2004	1690	1433	1217	1040

Tab.13 Temperature flow/heating circuit return sensor (NTC10K Beta 3977 10 kOhm@25 °C)

Temperature [°C]	0	10	20	25	30	40	50	60	70	80	90
Resistance [Ω]	32505	19854	12483	9999	8060	5332	3608	2492	1754	1257	915

Tab.14 Flue gas temperature sensor (NTC20K Beta 3970 20 kOhm@25 °C)

Temperature [°C]	0	10	20	25	30	40	50	60	70	80	90	100
Resistance [Ω]	66050	40030	25030	20000	16090	10610	7166	4943	3478	2492	1816	1344

— — — — —>	110	120	130	140	150	160	170	180	190	-	-	-
— — — — —>	1009	768	592	461	364	290	233	189	155	-	-	-

3.3 Dimensions and connections

Fig.3 Dimensions and connections

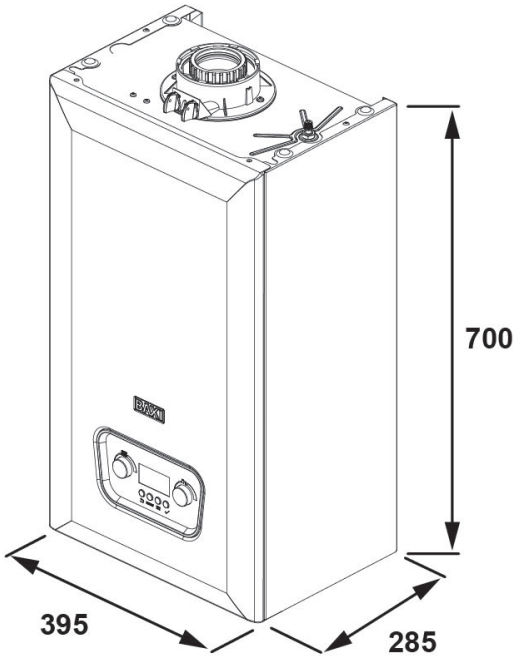

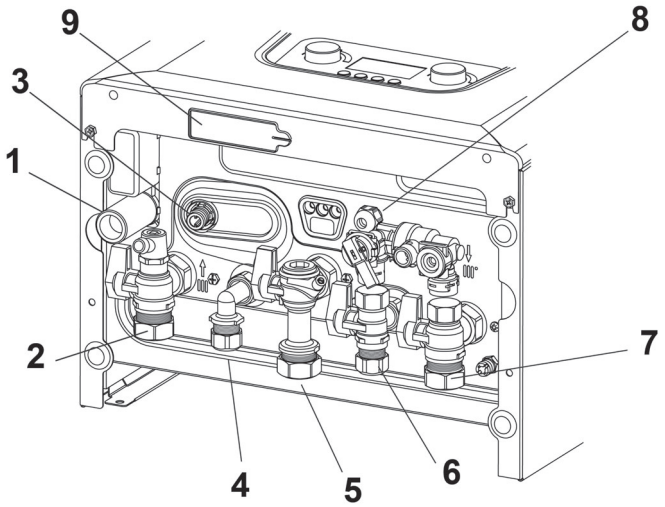

1 Condensate outlet
2 Heating circuit flow fitting (G3/4”)
3 Pressure relief & drain
4 DHW (Domestic Hot Water) outlet fitting (G1/2”)
5 Gas inlet fitting (G3/4”)
6 Domestic cold water inlet fitting (G1/2”)
7 Heating circuit return fitting (G34")
8 Cable gland
9 Boiler ID inc. serial number

Fig.4 Paper template

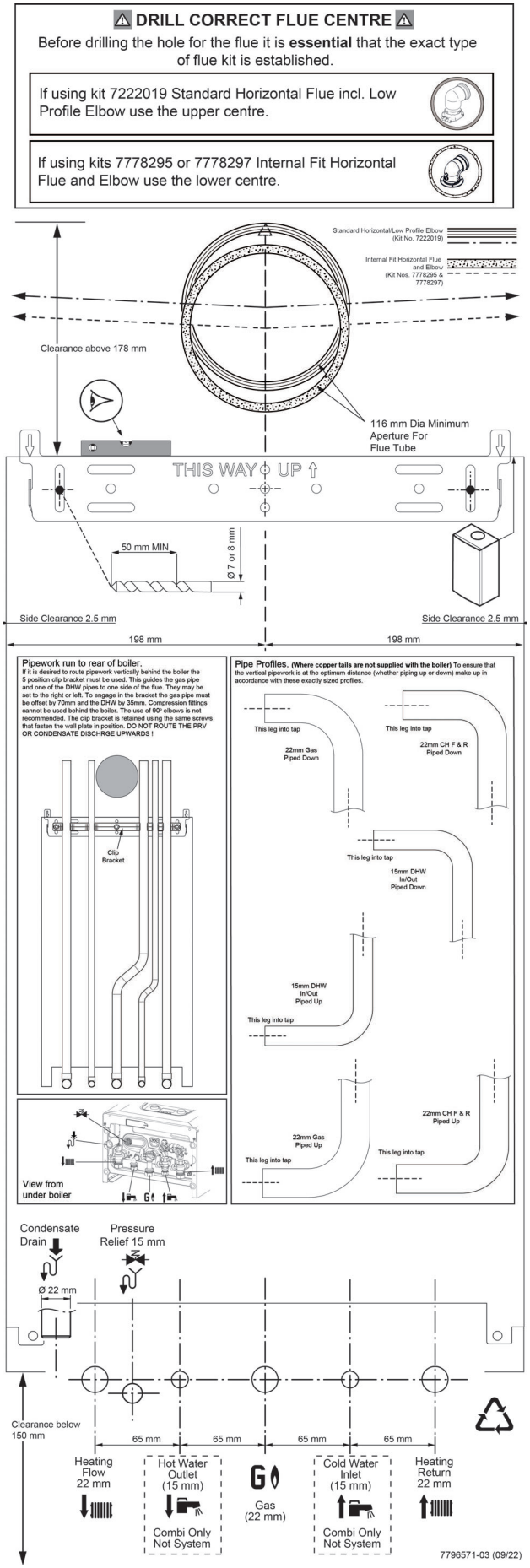

3.4 Electrical diagram

Fig.5 Boiler electrical wiring diagram

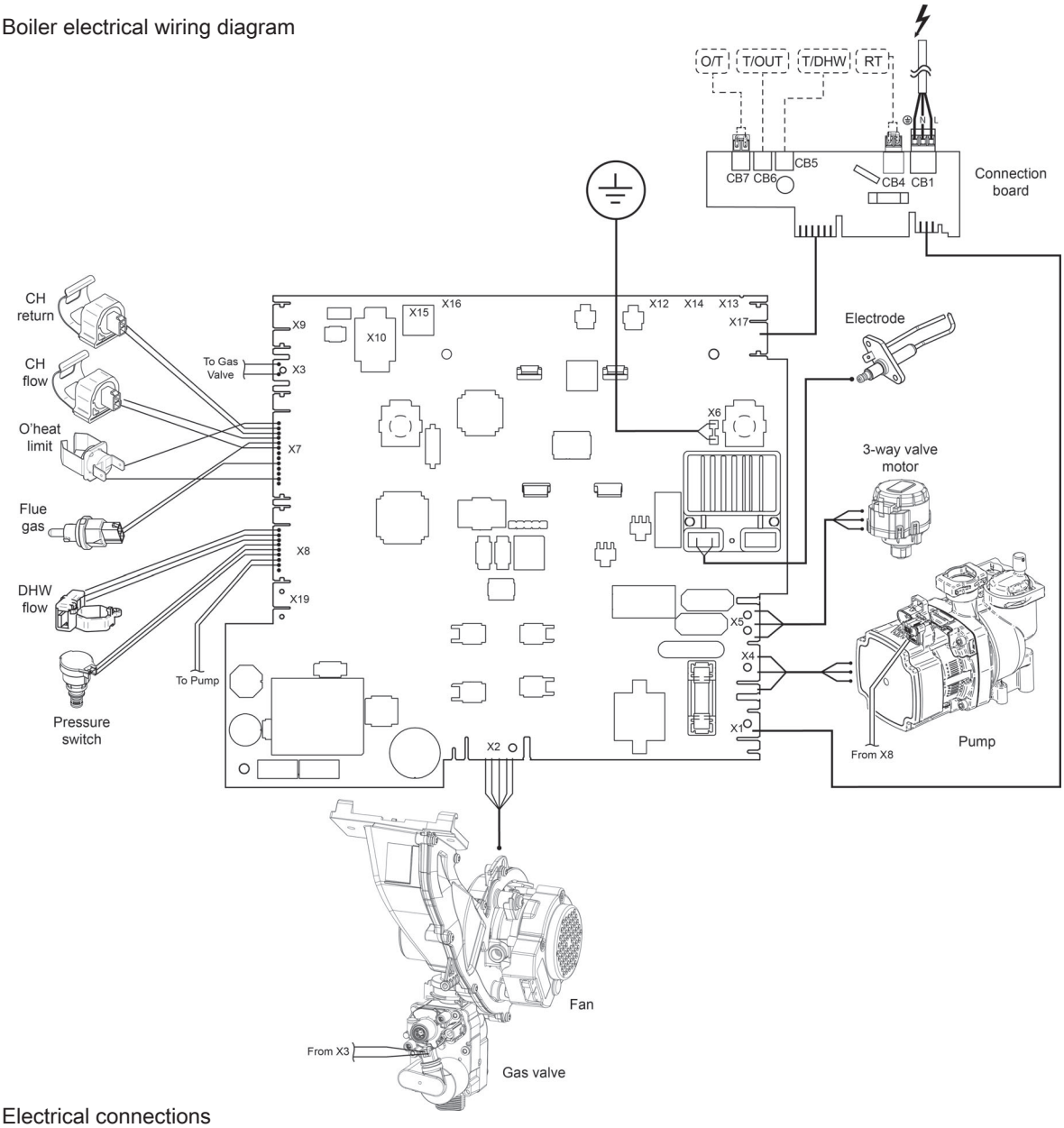

Tab.15 Electrical connections

X1	Power supply: L: Live 230 V – 50 Hz N: Neutral ⏚ : Earthing connector	X9	CAN connection
X2	Fan supply (FAN)	X10	Service interface
X3	Gas valve (GV)	X17	Open Therm room unit (OT)
X4	Pump power supply	X17	Outside sensor (OS)
X5	3-way valve motor power supply	X17	External tank sensor - accessory (BS)
X6	Earth connections	X15	Boiler stoppage (with open contact)
X7	Sensors: Limit thermostat (ST) Installation return temperature (SRT) Installation flow temperature (SFL) Flue gas temperature (FS)	RT	Room thermostat contact (230 V)
X8	Sensors: DHW flowmeter (HS) Heating circuit pressure switch (SP) Pump PWM signal (PWM PUMP)		

4 Description of the product

4.1 General description

The purpose of this gas-fuelled condensing boiler is to heat water to a temperature that is lower than boiling point at atmospheric pressure. It must be connected to a heating installation and to a domestic hot water distribution system that is compatible with its power and performance ratings. Features of this boiler:

Low pollutant emissions,
High-efficiency heating,
Combustion products discharged through a concentric connector,
Front control panel with display,
Lightweight and compact.

4.2 Operating principle

4.2.1 Air-gas adjustment

The air is drawn in by the fan and gas injected directly at the height of the venturi. The fan revolution speed is regulated automatically by the electronic board based on the adjustment settings. The gas and air are mixed in the manifold. The gas/air ratio ensures that the quantity of gas and air are adjusted correctly to always obtain optimal combustion. The gas/air mixture is fed into the burner at the front of the exchanger.

Here, the electric igniter triggers the mixture with a series of sparks that burn, producing thermal energy.

4.2.2 Combustion

The burner heats the heating water circulating in the heat exchanger. When the temperature of the combustion gas is lower than the dew point (around 55 °C), the water vapour contained in the combustion gas condenses in the flue gas side of the heat exchanger. The heat recovered during this condensation process (the latent heat or condensing heat) is also transferred to the heating water. Once cooled, the combustion gases are discharged through the exhaust pipe. The condensed water is discharged through a siphon.

4.2.3 Heating and domestic hot water production

In boilers used for heating and for producing domestic hot water, an integrated plate heat exchanger heats the domestic water. The heated water is then channelled to the heating installation or to the plate heat exchanger via a three-way valve. A flow sensor detects that a hot water tap has been turned on and communicates this to the PCB, which switches the three-way valve to the hot water position and activates the pump. The three-way valve is spring-loaded and only consumes electricity when switching from one position to another. Precedence is given to a heat request in domestic water mode.

4.2.4 Schematic diagram

Fig.6 Schematic diagram

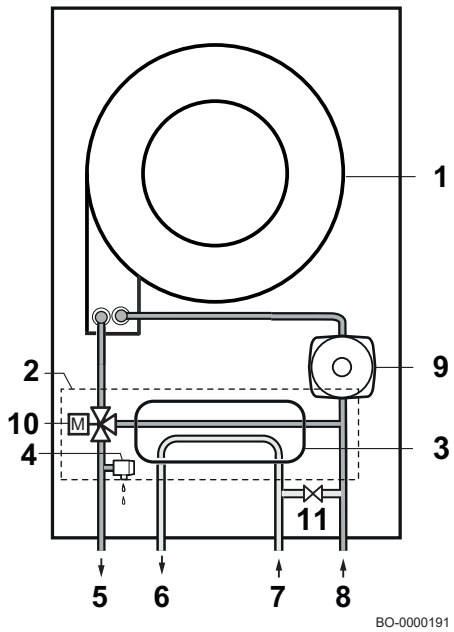

1	Heat exchanger (heating)
2	Water unit
3	Plate heat exchanger (DHW)
4	Safety valve
5	Heating flow
6	DHW outlet (G1/2")
7	DHW inlet (G1/2")
8	Heating return
9	Pump (heating circuit)
10	Motorised three-way valve
11	Filling link

4.3 Main Components

Fig.7 Functional diagram

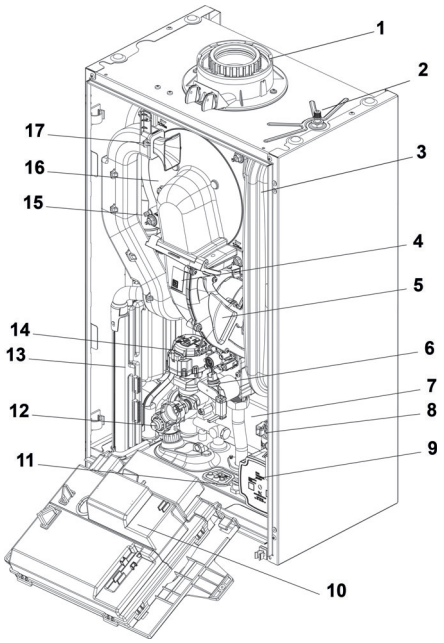

1. Flue Adaptor
2. Expansion vessel valve
3. Expansion vessel
4. Air-gas collector
5. Fan
6. Gas valve
7. DHW plate to plate heat exchanger
8. DHW flow sensor
9. Pump
10. Control panel/facia/PCB's
11. Cable gland
12. Safety pressure relief valve & drain
13. Condensate trap
14. 3 way valve motor
15. Electrode
16. Burner flange
17. Silencer

4.4 Control panel description

4.4.1 Description of the control panel

Fig.8 Control panel

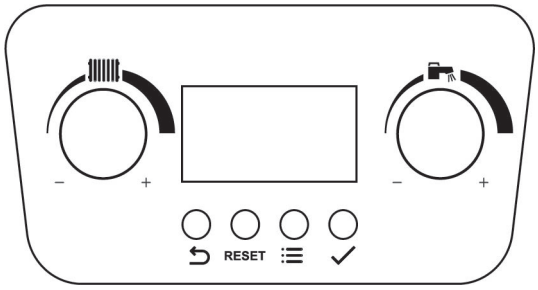

Knobs

HEATING: Using this knob you can modify the flow temperature for the heating installation (heating setpoint 25-80 °C).

- turn the knob anti-clockwise to reduce the temperature or to scroll through the menus. With an outside sensor connected it is possible to limit the setpoint value; turn
- the knob clockwise to increase the temperature or to scroll through the menus.

DOMESTIC HOT WATER: Using this knob you can modify the domestic hot water temperature (DHW setpoint 35÷60 °C) or scroll through the menus to the left and right:

- turn anti-clockwise to reduce the temperature.
- turn clockwise to increase the temperature.

Fig.9 Display screen

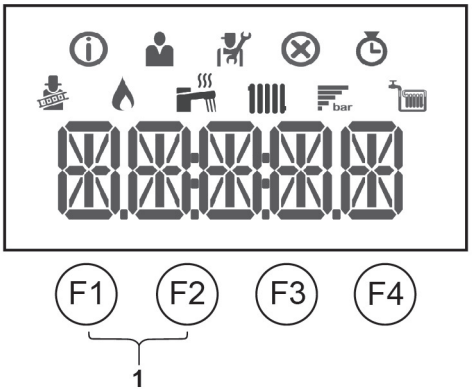

Icons

Chimney sweep mode is enabled (forced full load or low load for CO_2 measurement).

The burner is on.

Display of the system water pressure.

DHW operation is enabled.

CH operation is enabled.

Information menu: read out various current values.

User menu: user-level parameters can be configured.

Installer menu: installer-level parameter can be configured.

Error menu: errors can be read out.

Counter menu: various counters can be read out.

Buttons

F1 Back (previous menu)

F2 Manual reset

F3 Menu

F4 Confirms selection or value.

1 Chimney sweep mode:
Press keys **F1** and **F2** simultaneously.

4.5 Contents of the package

The boiler is delivered in a package including:

Wall-hung gas boiler
Wall bracket for fastening the boiler to the wall
"Easy-Fill" permanent filling link
Fitting kit including taps
Adey Magnaclean Micro 2 Magnetic System Filter
Literature pack containing:
- Installation & Service Manual
- User Guide
- Template
- Flue Guide
- Warranty documents
- ErP product & package leaflets

4.6 Accessories & options

Consult the sales catalogue for all available accessories and options.

5 Before installation

5.1 Installation standards and rules

Warning
Installation, repair and maintenance must only be carried out by a competent person. This document is intended for use by competent persons.

Installation must be carried out in accordance with the prevailing regulations, the code of practice and the recommendations in these instructions.

Installation must also respect the following points:

This instruction manual and any other applicable documentation
Building Regulations
British Standards
Gas Safety Regulations
Water Supply Regulations

5.2 Installation requirements

5.2.1 Gas supply

The gas installation should be in accordance with the relevant standards. In GB this is BS 6891 (NG). In IE this is the current edition of IS 813 Domestic Gas Installations.

The connection to the appliance is a 22 mm copper tail located at the rear of the gas service cock.

Ensure that the pipework from the meter to the appliance is of adequate size, and the demands of any other gas appliances in the property are taken into consideration. Do not use pipes of a smaller diameter than the boiler gas connection (22 mm) UNLESS the stated gas rate can be achieved with pipe of lesser diameter and with all other gas appliances operating at maximum rate.

5.2.2 Electrical supply

External wiring must be correctly earthed, polarised and in accordance with relevant regulations/rules. In GB this is the current IEE Wiring Regulations. In IE reference should be made to the current edition of ETCI rules.

The mains supply is 230 V ~ 50 Hz fused at 3 A.

Important
The method of connection to the electricity supply must facilitate complete electrical isolation of the appliance.
Connection must be via a fused double-pole isolator with a contact separation of at least 3 mm in all poles and servicing the boiler and system controls only.

The boiler must be connected to the mains fused 3 A 230 V 50 HZ supply & control system using cable of 3 core 0.75 mm 3183Y multi strand flexible type.

Important

Any wiring to the boiler, from either the mains or an external control, MUST be cable of the following specification:- 0.75 mm 3183/4/5Y (depending on installation) multi strand flexible cable conforming to BS 50525-2-11.
Cable of the above specification is sufficiently flexible to withstand normal regular opening and closing of the facia/control box as expected during routine servicing and other maintenance work.
Use ONLY cable glands supplied with the boiler, or provided as spares by the manufacturer.
Under no circumstances must solid core cable be used as it is not intended for applications where movement may occur. The use of solid core cable could result in situations potentially hazardous to health.
These points must be considered when initially wiring the boiler to the installation, and if replacing any wiring during the service life of the boiler.

5.2.3 Hard water area

Important

Only water that has NOT been artificially softened must be used when filling or re-pressurising the primary system. If the mains cold water to the property is fitted with an artificial softening/treatment device the source utilised to fill or re-pressurise the system must be upstream of such a device.

5.2.4 Bypass

The boiler utilises the primary side of the DHW plate heat exchanger as an automatic integral bypass. In some cases an additional bypass may be required depending upon system design.

5.2.5 System control

Further external controls (e.g. room thermostat sensors) MUST be fitted to optimise the economical operation of the boiler in accordance with Part L of the Building Regulations. A range of optional controls is available. Full details are contained in the relevant Sales Literature.

Any proprietary OpenTherm control MUST allow individual adjustment of CH and DHW temperature.

5.2.6 Treatment of water circulating systems

All recirculatory water systems will be subject to corrosion unless an appropriate water treatment is applied. This means that the efficiency of the system will deteriorate as corrosion sludge accumulates within the system, risking damage to pump and valves, boiler noise and circulation problems.

When fitting new systems flux will be evident within the system, which can lead to damage of system components.

BS 7593 is a regulatory requirement within Building Regulations, Part L.

All systems must be thoroughly drained and flushed out using appropriate proprietary flushing agent.

A suitable inhibitor must then be added to the system.

All system additives (flushing agents, cleansers, inhibitors etc.) must comply with the requirements of BS 7593. Full instructions are supplied with the products and for further information contact the additive manufacturer directly or consult their website.

Important
Failure to flush and add inhibitor to the system will invalidate the appliance warranty.

It is important to check the inhibitor concentration after installation, system modification and at every service in accordance with the inhibitor manufacturer. (Test kits are available from inhibitor stockists.)

For information or advice regarding any of the above contact Baxi Customer Support 0344 871 1545.

5.2.7 Showers

If a shower control is supplied from the appliance it should be of the thermostatic or pressure balanced type. Thermostatic type shower valves provide the best comfort and guard against water at too high a temperature. Existing controls may not be suitable - refer to the shower valve manufacturer.

5.2.8 Expansion vessel (CH only)

The appliance expansion vessel is pre-charged to 1.0 bar. Therefore, the minimum cold fill pressure is 1.0 bar. The vessel is suitable for correct operation for system capacities up to 100 litres. For greater system capacities an additional expansion vessel must be fitted.

For GB refer to BS 7074 Pt 1. For IE, the current edition of IS 813 Domestic Gas Installations.

Checking the charge pressure of the vessel - to check the charge accurately ensure the system is cold. It is also necessary to relieve the pressure by draining the boiler. Using a suitable gauge check the pressure at the valve on the underside of the vessel. Adjust the pressure as required and repressurise the system.

5.2.9 Safety pressure relief valve

Fig.10 Discharge pipe

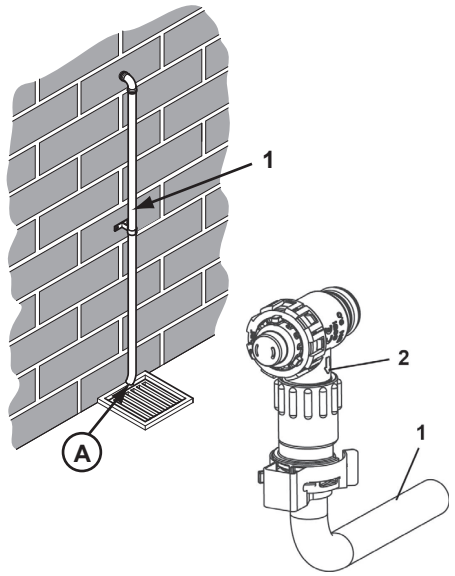

1 Discharge pipe
2 Pressure relief valve & drain
A The end of the pipe should terminate facing down and towards the wall

See
BS 6798 for full details.

The pressure relief valve is set at 3 bar, therefore all pipework, fittings, etc. should be suitable for pressures in excess of 3 bar and temperature in excess of 100 °C.

The pressure relief discharge pipe should be not less than 15 mm diameter, run continuously downward, and discharge outside the building, preferably over a drain. It should be routed in such a manner that no hazard occurs to occupants or causes damage to wiring or electrical components. If it is anticipated that any part of the pipe may be subject to freezing it should be suitably insulated. The end of the pipe should terminate facing down and towards the wall.

The discharge must not be above a window, entrance or other public access. Consideration must be given to the possibility that boiling water/ steam could discharge from the pipe.

Important
The relief valve can be used as a drain.

A remote relief valve kit is available to enable the boiler to be installed in cellars or similar locations below outside ground level.

A boiler discharge pump is available which will dispose of both condensate & high temperature water from the relief valve. It has a maximum head of 5 metres.

5.3 Flow rate/head at the plate characteristics

Fig.11 Graph of flow rate/head at the plate

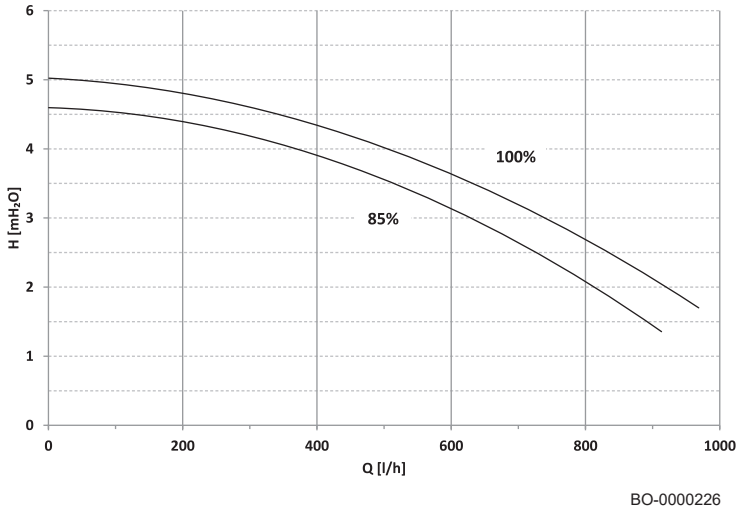

Tab.16 Description of graph of flow rate/head at the plate

Q	Flow volume
h	Dynamic head
85 %	Minimum modulation value in heating mode
100%	Maximum value in heating mode

To prevent flow noise, you must pay attention to the hydraulic design of the heating installation.

The system uses a high-head, modulating pump that is suitable for use on any type of one- or two-pipe heating system. The automatic air vent valve built into the pump body enables fast venting of the heating system.

Operation of the pump in DHW mode —> 100% fixed.

Operation of the pump in heating mode —> modulating by 85% to 100% .

5.4 Choice of the location

5.4.1 Location of the boiler

The boiler may be fitted to any suitable wall with the flue passing through an outside wall or roof and discharging to atmosphere in a position permitting satisfactory removal of combustion products and providing an adequate air supply. The boiler should be fitted within the building unless otherwise protected by a suitable enclosure i.e. garage or outhouse. (The boiler may be fitted inside a cupboard.)

Where the boiler is sited in an unheated enclosure and during periods when the heating system is to be unused it is recommended that the permanent live is left on to give BOILER frost protection. **NOTE:** THIS WILL NOT PROTECT THE SYSTEM !

If the boiler is fitted in a room containing a bath or shower reference must be made to the relevant requirements.

In GB this is the current IEE Wiring Regulations and Building Regulations.

In IE reference should be made to the current edition of IS 813 Domestic Gas Installations and the current ETCI rules.

It is not necessary to protect any surface the boiler is mounted on from heat generated during normal operation unless required by local authority regulations.

If the boiler is to be fitted into a building of timber frame construction then reference must be made to the current edition of Institute of Gas Engineers Publication IGE/UP/7 (Gas Installations in Timber Framed Housing).

Fig.12 Bathroom 1 and 2

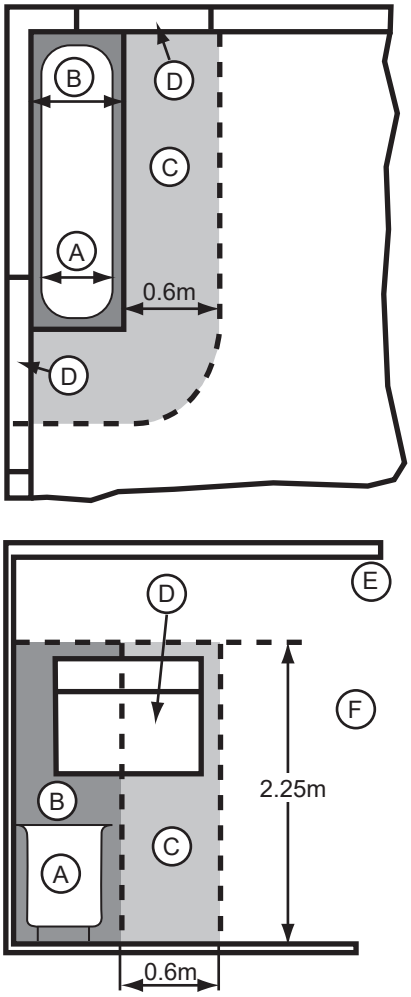

5.4.2 Bath and shower rooms

A	Zone 0
B	Zone 1
C	Zone 2
D	Window recess Zone 2
E	Ceiling
F	Outside zones

Important
The boiler has a protection rating of IPX5D and if installed in a room containing a bath or shower can be within Zone 2 (but not 0 or 1).

Bathroom 1 and 2 (in GB only) shows zone dimensions for a bathtub. For other examples refer to the Current IEE Wiring Regulations). Reference must be made to the relevant requirements.

In GB this is the current IEE. Wiring Regulations and Building Regulations.

In IE reference should be made to the current edition of IS 813 “Domestic Gas Installations” and the current ETCI rules.

5.4.3 Ventilation

Where the appliance is installed in a cupboard or compartment, no air vents are required. BS 5440: Part 2 refers to room sealed appliances installed in compartments. The appliance will run sufficiently cool without ventilation.

5.4.4 Condensate drain

Fig.13 Pipework and method of termination

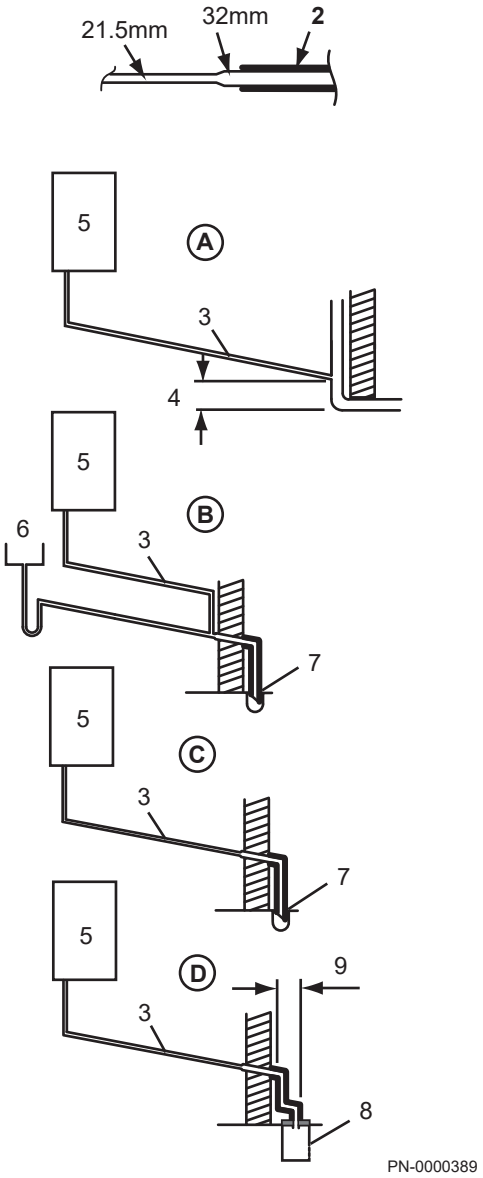

It is strongly recommended to discharge internally into the household drainage system. If connecting to a rain water drain, that drain MUST discharge into a foul drain.

1 Pipework.
2 Insulation.
3 50 mm per metre of pipe run — 2.5° minimum run.
4 450 mm minimum is applicable to properties up to 3 storeys. For multi-storey building installations consult BS 6798.
5 Boiler.
6 Sink.
7 Pipe must terminate above water level but below surrounding sur-face. Cut end at 45°.
8 Holes in the soak-away must face away from the building.
9 500 mm mimimum.
10 Basement or similar (heated)
11 Condensate pump
12 Unheated Location (e.g. Garage)

Tab.17 Examples are shown of the following methods of termination

Key	Description
A	Termination to an internal soil and vent pipe.
B	External termination via internal discharge branch e.g. sink waste — downstream (It is NOT RECOMMENDED to connect upstream of the sink or other waste water receptacle!)
C	Termination to a drain or gully.
D	Termination to a purpose made soakaway Further specific requirements for soakaway design are referred to in BS 6798
E	Pumped into an internal discharge branch (e.g. sink waste) downstream of the trap.
F	Pumped into an external soil and vent pipe.
G	Termination to a drain or gully with extended external run and trace heating. The "Trace Heating" element must be installed in accordance with the instructions supplied. External runs and those in unheated locations still require insulation.

Fig.14 Methods of termination continued

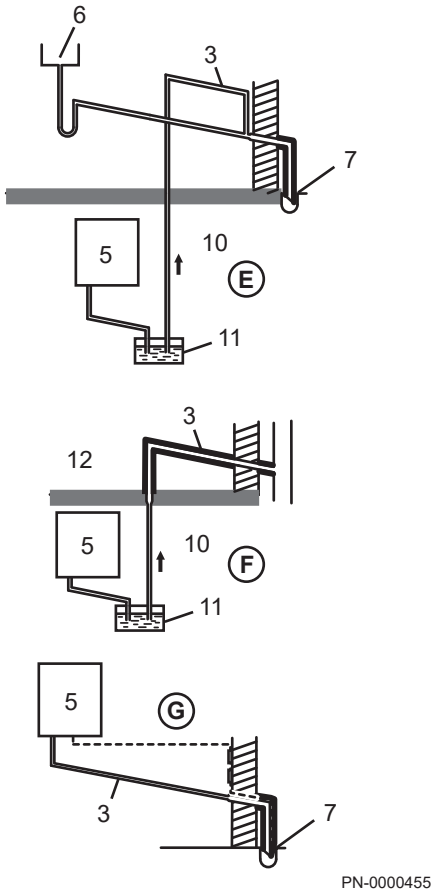

Important
Failure to install the condensate discharge pipework correctly will affect the reliable operation of the boiler.
Careful consideration must be given to the possibility of the pipework being subject to freezing conditions and appropriate measures taken to prevent blockage. Correct installation in accordance with this section will considerably minimise the likelihood of blockage and subsequent boiler lock-out.
A condensate discharge pump and pipe "Trace Heating" are available as accessories.
The condensate discharge pipe MUST NOT RISE at any point along its length. There MUST be a fall of AT LEAST 2.5° (50 mm per metre) along the entire run EXCEPT when employing a suitable condensate pump in basement and cellar or similar applications.
The boiler condensate trap incorporates a seal of 75 mm, therefore it is unnecessary to install an air break and trap in the discharge pipework.

The condensate outlet will accept 21.5 mm ($^3/_4$ in) plastic overflow pipe. **It is strongly recommended that this discharges internally into the household drainage system.** Where this is not possible, discharge into an outside drain is permissible providing every possible precaution is taken to prevent freezing.

Ensure the discharge of condensate complies with any national or local regulations in force. **BS 6798 & Part H1 of the Building Regulations give further detailed guidance.**

The discharge pipe should be run in a proprietary drain pipe material e.g. PVC, PVC-U, ABS, PVC-C or PP.

Metal pipework is NOT suitable for use in condensate discharge systems.

The pipe should be a minimum of 21.5 mm diameter and must be supported using suitably spaced clips of the correct design to prevent sagging.

It is advisable that the full length of condensate pipe is run internally and preferably be less than 3 metres.

Internal runs greater than 3 metres or runs in cold areas should use 32 mm waste pipe.

External runs MUST be a MINIMUM of 32 mm and fully insulated with ma-terial suitable for external use.

If the boiler is fitted in an unheated location the entire condensate discharge pipe should be treated as an external run and sized and insulated accordingly.

In all cases discharge pipe must be installed to aid disposal of the condensate. To reduce the risk of condensate being trapped, as few bends and fittings as possible should be used and any burrs on cut pipe removed.

When discharging condensate into a soil stack or waste pipe the effects of existing plumbing must be considered. If soil pipes or waste pipes are subjected to internal pressure fluctuations when WC's are flushed or sinks emptied then backpressure may force water out of the boiler trap and cause appliance lockout.

A boiler discharge pump is available which will dispose of both condensate & high temperature water from the relief valve. It has a maximum head of 5 metres. Follow the instructions supplied with the pump.

Condensate Drain Pipe "Trace Heating" Elements are available in various lengths, 1, 2, 3 & 5 metres. Where the drain is between 3 & 5 metres a 5 metre kit can be used and "doubled back" upon itself.

It is possible to fit the element externally on the condensate drain or internally as detailed in the instructions provided.

The fitting of a "Trace Heating" Element is NOT a substitute for correct installation of the condensate drain. ALL requirements in this section must still be adhered to.

Fig.15 Clearances

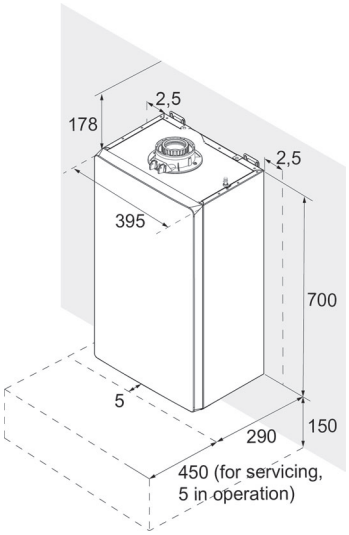

5.4.5 Clearances

A flat vertical area is required for the installation of the boiler and it should be capable of bearing the weight of the boiler when full of water.

These dimensions include the necessary clearances around the boiler for case removal, spanner access and air movement. Additional clearances may be required for the passage of pipes around local obstructions such as joists running parallel to the front face of the boiler.

In the diagram these are **MINIMUM** recommended dimensions. Greater clearance will aid installation and maintenance.

5.4.6 Flue/chimney location

The following guidelines indicate the general requirements for siting balanced flue terminals. For GB recommendations are given in BS 5440 Pt 1. For IE recommendations are given in the current edition of I.S. 813 Domestic Gas Installations.

Important
Due to the nature of the boiler a plume of water vapour will be discharged from the flue. This should be taken into account when siting the flue terminal.

Fig.16 Flue outlets

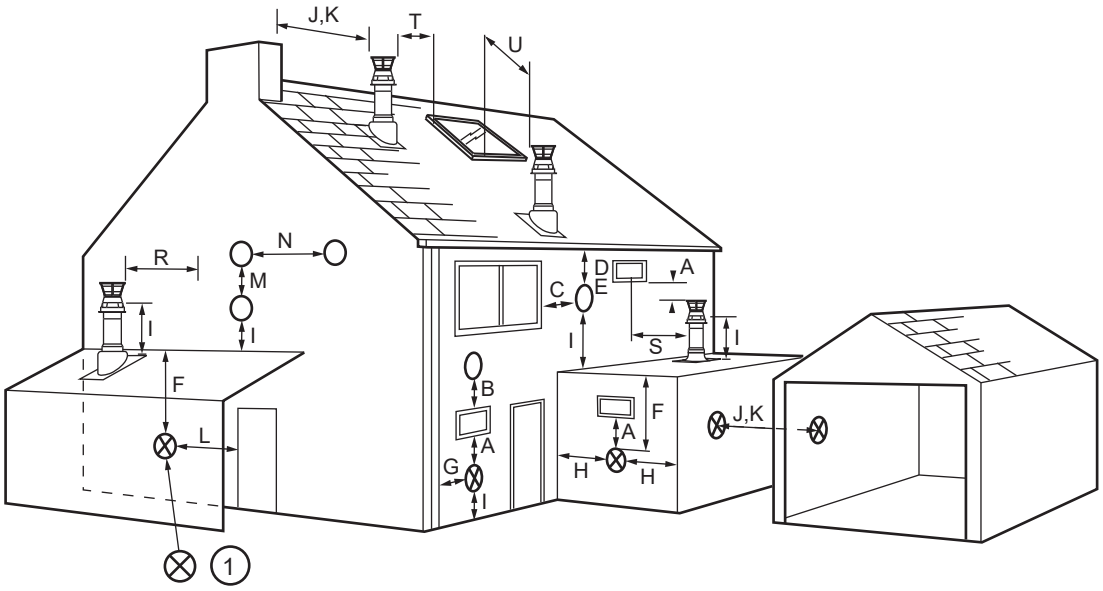

1 Flue positions marked ⊗ require a flue terminal guard.

Tab.18 Terminal position with minimum distance

Key	Description	mm	Key	Description	mm
A (1)	Directly below an opening, air brick opening window etc.	300	J	From a surface or boundary line facing a terminal	600
B (1)	Above an opening, air brick, opening window etc.	300	K	From a terminal facing a terminal (Horizontal flue)	1200
				From a terminal facing a terminal (Vertical flue)	600

Key	Description	mm	Key	Description	mm
C (1)	Horizontally to an opening, air brick, opening window etc.	300	L	From an opening in carport (e.g. door, window) into the dwelling	1200
D (2)	Below gutters, soil pipes or drain pipes	25 (75)	M	Vertically from a terminal on the same wall	1500
E (2)	Below eaves	25 (200)	N	Horizontally from a terminal on the same wall	300
F (2)	Below balconies or car port roof	25 (200)	R	From adjacent wall to flue (vertical only)	300
G (2)	From a vertical drain pipe or soil pipe	25 (150)	S	From an adjacent opening window (vertical only)	1000
H (2)	From an internal or external corner	25 (300)	T	Adjacent to windows or openings on pitched and flat roofs	600
I	Above ground, roof, or balcony level	300	U	Below windows or openings on pitched roofs	2000

(1) In addition, the terminal should be no nearer than 150 mm to an opening in the building fabric formed for the purpose of accommodating a built-in element such as a window frame.
(2) Only ONE 25 mm clearance is allowed per installation. If one of the dimension D,E,F,G or H is 25 mm then the remainder MUST be as shown in brackets, in accordance with BS 5440–1.

Important
Under car ports we recommend the use of the plume displacement kit. The terminal position must ensure the safe and nuisance - free dispersal of combustion products.

If the terminal discharges onto a pathway or passageway, check that combustion products will not cause a nuisance and that the terminal will not obstruct the passageway.

If a terminal is less than 2 metres above a balcony, above ground or above a flat roof to which people have access, then a suitable terminal guard must be provided.

Fig.17 Property boundary

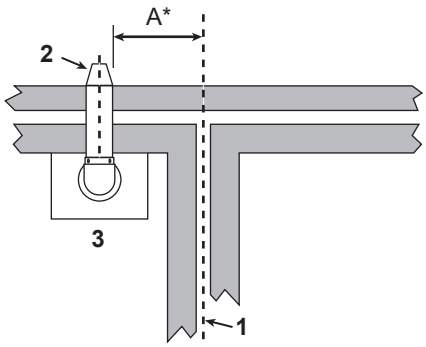

1 Property boundary line
2 Terminal assembly
3 Top view rear flue
A 300 mm minimum*

*Reduction to the boundary is possible down to 25 mm but the flue deflector must be used.

Important
The distance from a fanned draught appliance terminal installed parallel to a boundary may not be less than 300 mm in accordance with the diagram opposite.

Fig.18 Plume displacement kit

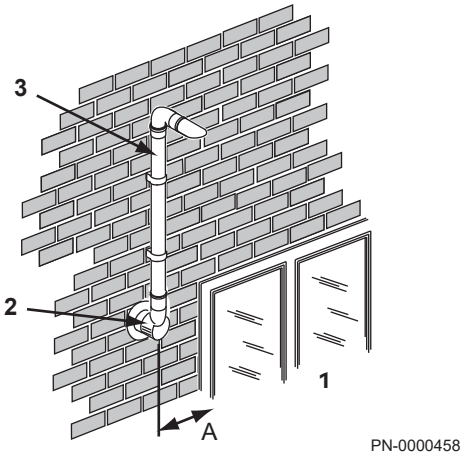

1 Opening window or door
2 Air inlet
3 Plume displacement kit
A 150 mm minimum

Important
If fitting a Plume Displacement Flue Kit, the air inlet must be a minimum of 150 mm from any opening windows or doors.

Important
The Plume Displacement flue gas discharge terminal and air inlet must always terminate in the same pressure zone i.e. on the same facing wall.

5.4.7 Horizontal flue/chimney systems

Fig.19 Horizontal flues

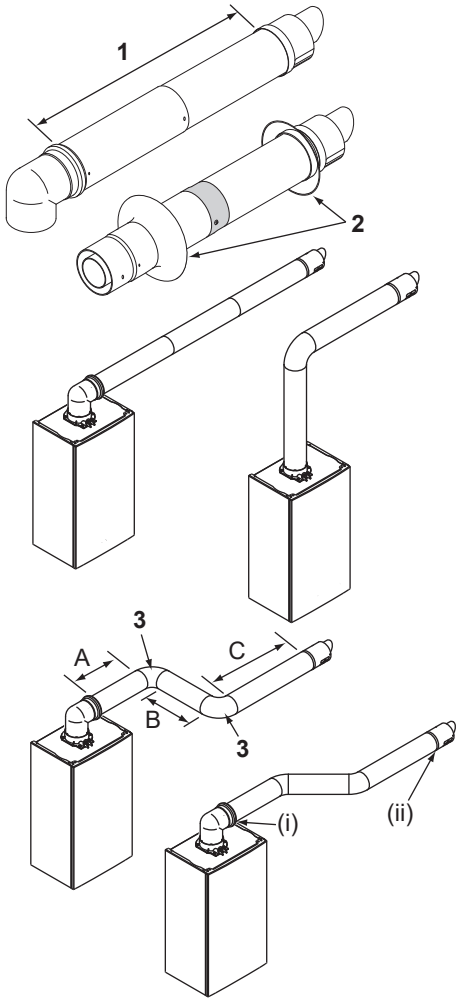

1	Standard telescopic (315-700 mm) 720598701
	Internal fit telescopic (300-470 mm) 7778296
	Internal fit telescopic (420-690 mm) 7778299

Only to be used for horizontal termination

2 Flue trims
3 This bend is equivalent to 1 metre

Total equivalent length = A+B+C+2 x 90° bends

Important
Horizontal flue extensions should always be installed with a fall of at least 1.5° from the terminal to allow condensate to run back to the boiler.

Extensions of 250 mm, 500 mm and 1 m are available.

All fittings should be fully engaged. The approximate engagement is 40 mm. Apply the lubricant supplied to the seal on each fitting to aid assembly.

Tab.19 Maximum permissible equivalent flue lengths are:-

Horizontal concentric	60/100 Diameter	80/125 Diameter
	10 metres	20 metres

Any additional "in line" bends in the flue system must be taken into consideration.

Tab.20 Their equivalent lengths are:-

Concentric pipes	135° bend	0.5 metres
	93° bend	1.0 metres

The elbow supplied with the flue kit is not included in any equivalent length calculations.

Important
Flue length is measured from point (i) to (ii) as shown.

See
Read this section in conjunction with the Flue Installation Guide supplied with the boiler. This document includes details of vertical flue/chimney systems and plume displacement kits.

It is preferrable that only the flue terminal protrudes from the wall. However, where circumstances dictate, it is permissible for the air duct (white tube) to be visible outside the property up to a maximum distance of 100 mm (Fig. 18a), providing the flue is adequately supported and conforms to the appropriate sections of B.S.5440:1, the boiler Installation Manual and flue guide.

If the flue is greater than 25 mm below a balcony, car port or similar the flue may protrude up to a maximum distance of 500 mm ‘V’ (Fig. 18b).

Where the flue will terminate beyond a balcony, car port or similar and the distance between the flue and underside of the balcony, car port or similar is only 25 mm at ‘Z’ it must protrude 100 mm ‘Y’ beyond the outer edge (Fig. 18c).

Where the flue exits under a balcony, car port or similar in excess of 500 mm, the distance between the flue and underside of the balcony, car port or similar MUST be 25 mm at ‘Z’ and this can be achieved with the use of elbows (Fig. 18d). It is also a requirement that the flue must protrude 100 mm ‘Y’ beyond the outer edge (Fig 18c.)

The horizontal 60/100 & 80/125 flue systems, including bends and extensions, are UV stable.

If any flue joint is external to the property, seal the joint with silicone sealant suitable for external use, not the tape supplied.

The maximum equivalent flue lengths as stated in the appropriate boiler Installation & Service Manual must not be exceeded.

The flue must always be installed with a fall of at least 1.5° from the terminal to allow condensate to run back to the boiler.

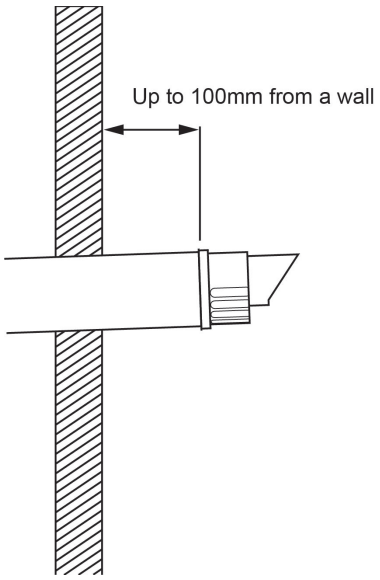

Fig. 18a

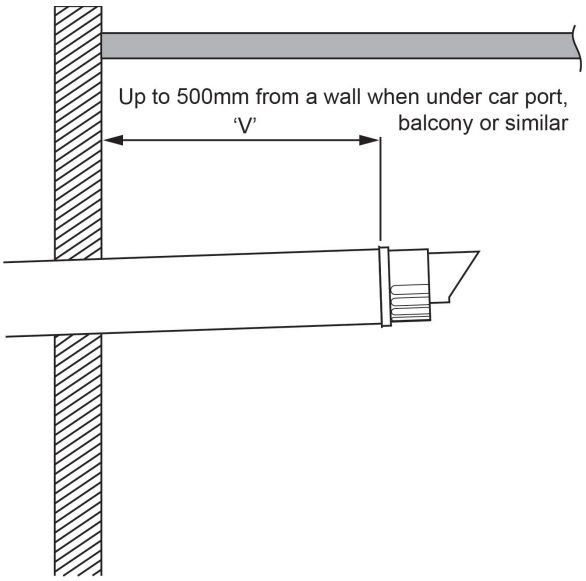

Fig. 18b

NOTE: For clarity support brackets are not shown in these illustrations.

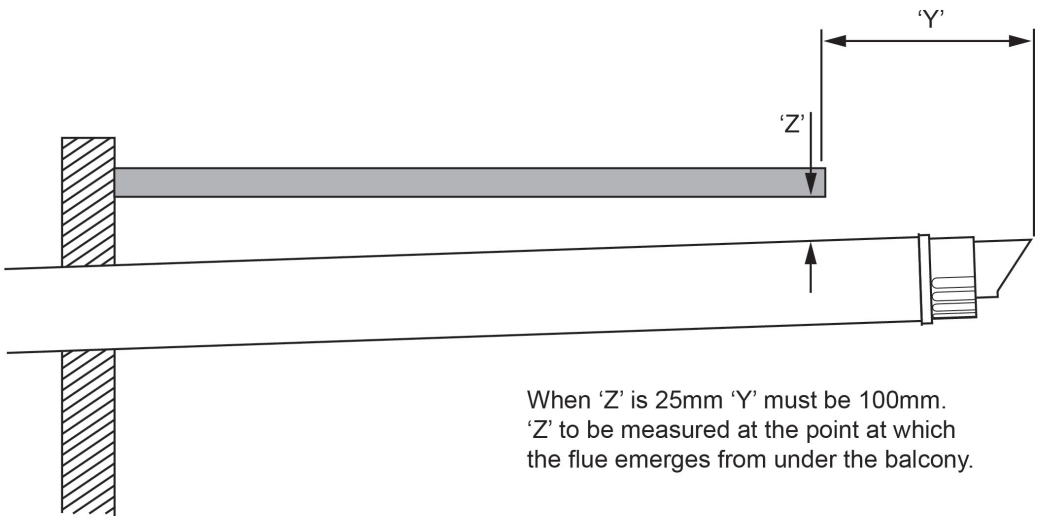

Fig. 18c

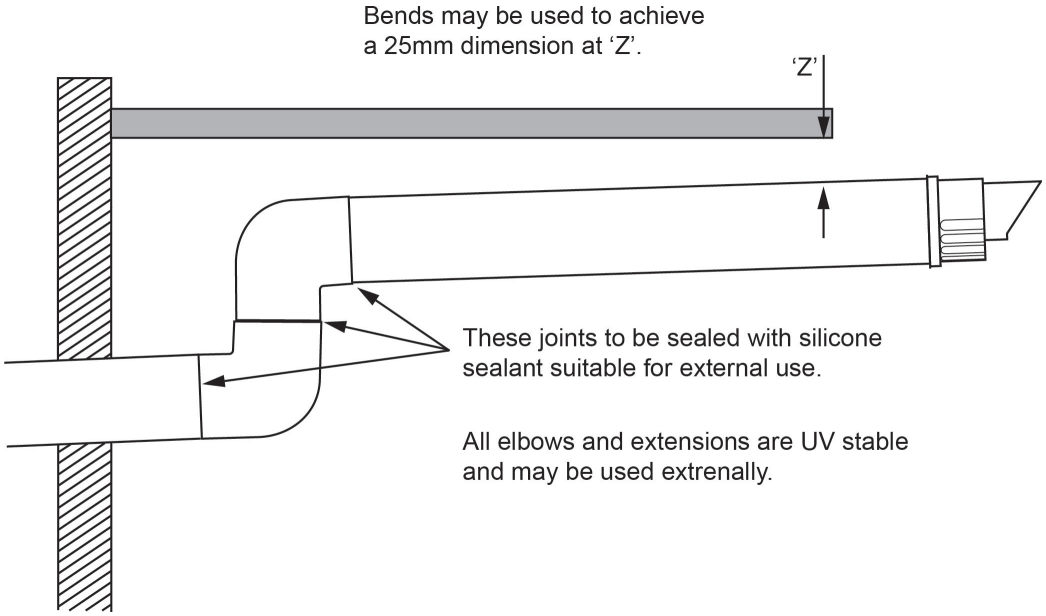

Fig. 18d

NOTE: For clarity support brackets are not shown in these illustrations.

Warning
SUPPORT - All flue systems MUST be securely supported at a MINIMUM of once every metre & every change of direction. It is recommended that every straight piece is supported irrespective of length. Additional supports are available as accessories.
VOIDS - Consideration must be given to flue systems in voids and the provision of adequate access for subsequent periodic visual inspection.

5.4.8 Flue/chimney trim

Fig.20 Flexible flue trims

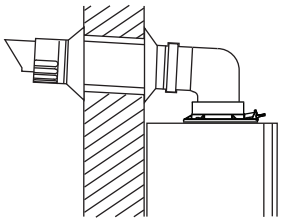

PN-0000390

The flexible flue trims supplied can be fitted on the outer and inner faces of the wall of installation.

Fig.21 Terminal guard

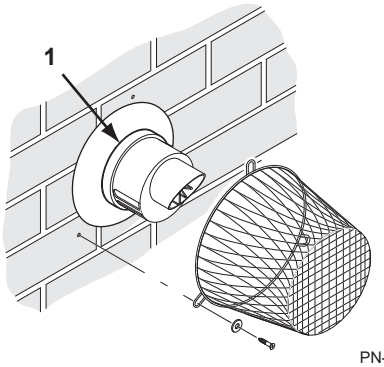

PN-0000460

5.4.9 Terminal guard

When codes of practice dictate the use of terminal guards Multifit accessory part no. 720627901 can be used

Important
This guard is not compatible with Flue Deflector referred to below.

There must be a clearance of at least 50 mm between any part of the terminal and the guard.

When ordering a terminal guard, quote the appliance name and model number.

The flue terminal guard should be positioned centrally over the terminal and fixed as illustrated.

5.4.10 Flue/chimney deflector

Fig.22 Flue deflector

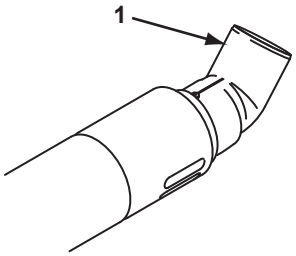

PN-0000461

1 Flue deflector

Push the flue deflector over the terminal end. It may point upwards as shown, or up to 45° either way from vertical. Secure the deflector to the terminal with screws provided.

5.4.11 Flue/chimney accessories

See
For full details of Flue Accessories (elbows, extensions, clamps etc.) refer to the Flue Installation Guide supplied in the literature pack.

5.4.12 Data plate and boiler service label

The data plate is located above the boiler controls. The data plate provides important information about the appliance (see the sample data plate shown in the figure). Also note the LPG conversion label which must be amended when converting to LPG (section 7.4.3).

Fig.23 Position of the data plate

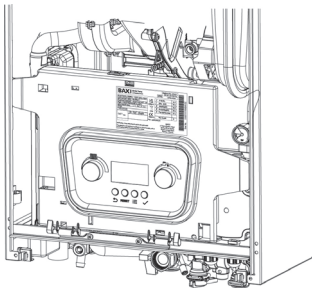

Fig.24 Typical data plate & LPG conversion label

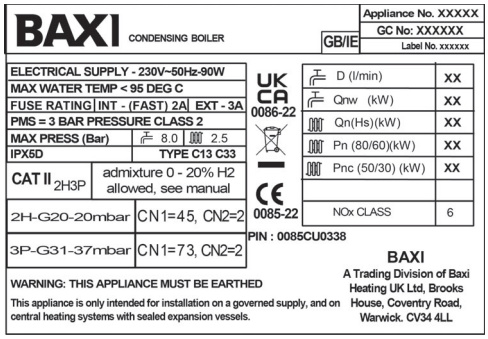

BAXI CONDENSING BOILER

Appliance No. XXXXX	
GC No: XXXXXX	
GB/IE	Label No. xxxxxx

ELECTRICAL SUPPLY - 230V~50Hz-90W	
MAX WATER TEMP < 95 DEG C	
FUSE RATING INT - (FAST) 2A	EXT - 3A
PMS = 3 BAR PRESSURE CLASS 2	
MAX PRESS (Bar)	8.0 / 2.5
IPX5D	TYPE C13 C33
CAT II 2H3P	admixture 0 - 20% H2 allowed, see manual
2H-G20-20mbar	CN1=45, CN2=2
3P-G31-37mbar	CN1=73, CN2=2

UK CA 0086-22

CE 0085-22

PIN : 0085CU0338

D (l/min)	XX
Qnw (kW)	XX
Qn(Hs)(kW)	XX
Pn (80/60)(kW)	XX
Pnc (50/30) (kW)	XX
NOx CLASS	6

WARNING: THIS APPLIANCE MUST BE EARTHED

This appliance is only intended for installation on a governed supply, and on central heating systems with sealed expansion vessels.

BAXI
A Trading Division of Baxi Heating UK Ltd, Brooks House, Coventry Road, Warwick. CV34 4LL

TNC230100002AC-C+7

This Appliance is factory set for use with NG	X
This Appliance has been converted for use with LPG	
This Appliance has been reverted for use with NG	

Fig.25 User information label

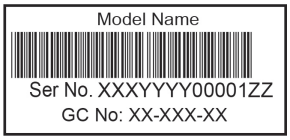

Model Name

Ser No. XXXYYYY00001ZZ

GC No: XX-XXX-XX

5.5 Transport

The boiler should be transported vertically using a sack truck or similar as indicated on the packaging.

Warning
Lifting the boiler should be performed by two people.

5.6 Unpacking & initial preparation

5.6.1 Unpacking

Caution
RISK ASSESSMENT - Before commencing the installation it is recommended that the "Five Steps to Risk Assessment" document published by the HSE is consulted, and an assessment performed as described. GAS SUPPLY - The gas supply, gas type and pressure must be checked for suitability before connection.

See
Handling, page 9 before unpacking or lifting the boiler.

To unpack the boiler:

1. Remove the banding.
2. Open the flaps and remove the wall bracket.
3. Slide the sleeve upwards.
4. Remove the upper tray and installation kit.
5. Remove the upper packing piece.

Important
Care must be taken to avoid damage from any residual water in the boiler.

Fig.26 Unpacking the boiler

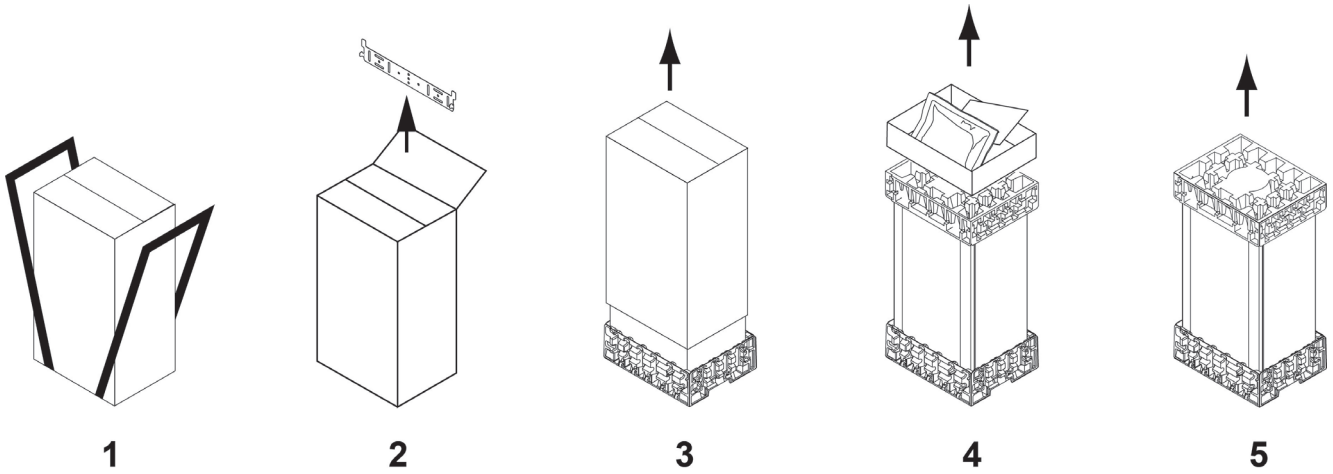

5.6.2 Initial preparation

Fig.27 Template

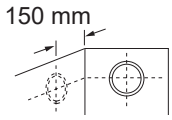

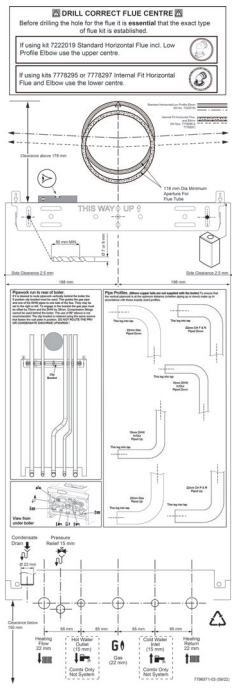

1. After considering the site requirements position the fixing template on the wall ensuring it is level both horizontally and vertically.
2. Mark the position of the two most suitable fixing slots for the wall bracket.
3. Mark the position of the centre of the flue hole (rear exit). For side flue exit, mark as shown.
4. If required, mark the position of the gas and water pipes. Remove the template.
5. Cut the hole for the flue (minimum diameter 116 mm).
6. Drill the wall as previously marked to accept the wall plugs supplied. Secure the wall bracket using the fixing screws.
7. Using a spirit level ensure that the bracket is level before finally tightening the screws.

5.7 Connecting diagrams

5.7.1 Filling information

Fig.28 System filling circuit

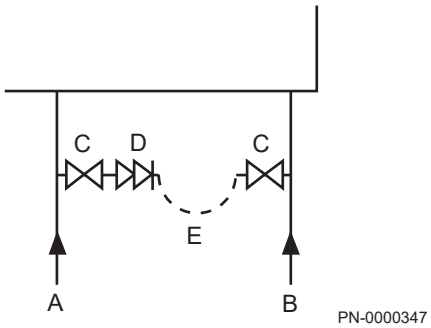

A Domestic hot water mains inlet
B Central heating return
C Stop valve
D Double check valve (Not supplied)
E Loop (Temporary or Permanent)

A filling point connection on the central heating return pipework must be provided to facilitate initial filling and pressurising and also any subsequent water loss replacement/refilling.

The filling method adopted must be in accordance with all relevant water supply regulations and use approved equipment.

Your attention is drawn to:

for GB: Guidance G24.2 and recommendation R24.2 of the Water Regulations Guide.
for IE: the current edition of I.S. 813 Domestic Gas Installations.

A Cold mains in
B Heat return

The sealed primary circuits may be filled or replenished by means of a temporary connection between the circuit and a supply pipe, provided a "Listed" double check valve or some other no less effective backflow prevention device is permanently connected at the inlet to the circuit and the temporary connection is removed after use.

When the permanent filling link supplied with the boiler is fitted it is not necessary to remove any part of it after filling or re-pressurising.

Fig.29 Circuit plan

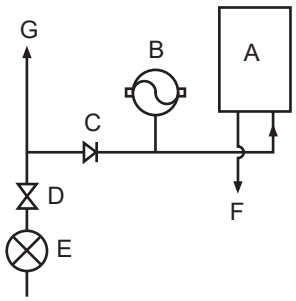

PN-0000350

5.7.2 Domestic hot water circuit

A Boiler
B Expansion vessel
C Check valve
D Pressure reducer
E Stop tap
F To hot tap
G Other tap outlets

All DHW circuits, connections, fittings, etc. should be fully in accordance with relevant standards and water supply regulations.

Your attention is drawn to:

for GB: Guidance G17 to G24 and recommendation R17 to R24 of the Water Regulations Guide.

for IE: the current edition of IS 813 Domestic Gas Installations.

The Water Regulations recommendations for England and Wales prohibits backflow from appliances into the wholesome water supply due to thermal expansion. However this type of instantaneous combination boiler, with less than 15 litres of stored capacity, does not require any backflow prevention device as any thermal expansion is accommodated within the appliance. It is possible in certain circumstances that other cold water demands (e.g. washing machines, flushing of WCs) may affect the DHW function of the boiler. In these instances the fitting of a backflow prevention device and expansion vessel is recommended.

Important
In instances where the mains water supply incorporates a non-return backflow prevention device, or any other device that includes one*, it is possible for a build-up of pressure to occur. This may result in damage to the boiler and other appliances. To prevent damage to the boiler it is strongly recommended that a suitable mini expansion vessel is fitted on the mains water inlet between the boiler and the non-return device.
*(The manufacturer of the device should be consulted if there is any doubt regarding the presence of a non-return feature).
Even in circumstances where a non-return device is not fitted any future modifications to the mains inlet (e.g. fitting of a water meter) should be considered and an expansion vessel fitted. Baxi cannot accept any responsibility for damage to the boiler if these recommendations are not followed.

The boiler’s maximum working mains pressure is 8 bar, therefore all pipework, connections, fittings, etc. should be suitable for pressures in excess of 8 bar. A pressure reducing valve must be fitted for pressures in excess of 8 bar. The manufacturer of any outlet fittings, such as a shower valve, may require a lower maximum pressure. The pressure reduction must take account of all fittings connected to the DHW system.

6 Installation

6.1 General

Fig.30 Mounting the boiler

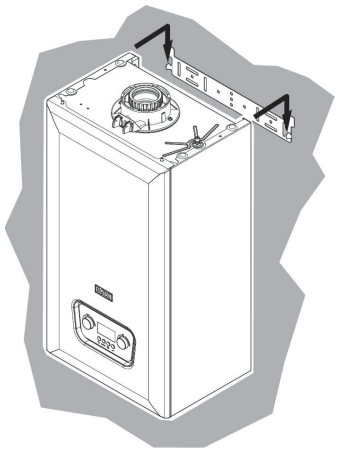

Installation must be carried out in accordance with the prevailing regulations, codes of practice and the recommendations in this manual.

Danger
If the boiler is installed in a compartment do not use it for storage purposes. Do not obstruct any purpose provided ventilation openings.

Caution
Where the boiler is sited in an unheated enclosure provision must be made to protect against frost, e.g. frost thermostat, pipe thermostat.

1. Lift the boiler and hook onto the wall bracket.
2. Remove the sealing caps from the connections under the boiler.

Fig.31 Connecting the taps

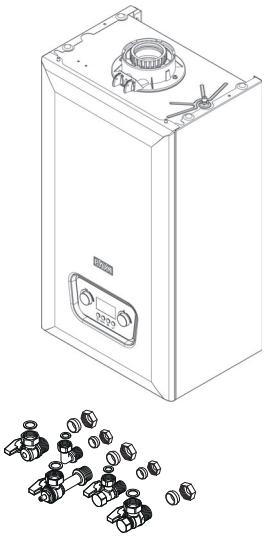

Warning
Some residual water may escape when removing the sealing caps. Take precautions to avoid damage to components !

3. Remove the taps, elbow and sealing washers from the fitting kit. The taps and elbow accept 15 mm or 22 mm copper pipe as appropriate — see template.
4. Connect the appropriate tap to the heating flow and return pipework, gas supply and mains cold inlet.
5. Connect the elbow to the DHW flow outlet.
6. Using the sealing washers provided connect the taps and elbow to the boiler.
7. Ensure all joints are tight.

6.2 Assembly

6.2.1 Fitting the pressure relief discharge pipe

Fig.32 Pressure relief pipe connection

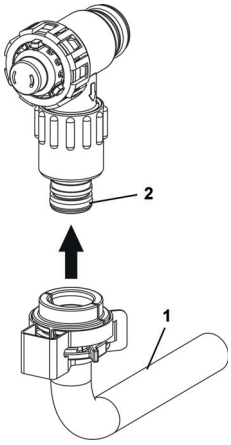

1. Remove the discharge pipe elbow (1) from the kit.
2. Determine the routing of the discharge pipe in the vicinity of the boiler. Make up as much of the pipework as is practical, including the discharge pipe elbow supplied.

Important
Make all soldered joints before connecting to the pressure relief valve. Do not adjust the position of the valve. The discharge pipe must be installed before pressurising the system.

3. The pipework must be at least 15 mm diameter and run continuously downwards to a discharge point outside the building.
4. Push the discharge elbow onto the valve outlet spigot (2) until a 'click' is felt indicating correct location.
5. Complete the discharge pipework and route it to the outside discharge point.

6. The pipework must be clipped at suitable intervals to support it, commencing as close to the boiler as possible.

6.2.2 Connecting the condensate drain

Fig.33 Pour 300ml of water into flue spigot

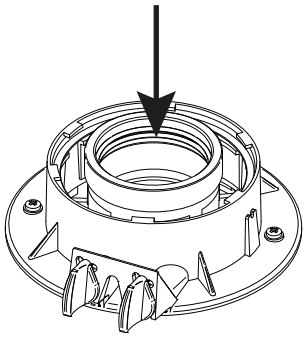

1. Remove the blanking cap, and using the straight rubber coupling supplied, connect the condensate drain pipework to the boiler condensate trap outlet pipe.

See
Ensure the discharge of condensate complies with any national or local regulations in force (see HHIC recommendations).

See
Condensate drain, page 27.

2. The straight rubber coupling will accept 21.5 mm ($^3/_4$ in) plastic over-flow pipe which should generally discharge internally into the house-hold drainage system. If this is not possible, discharge into an out-side drain is acceptable.

Important
The boiler condensate trap should be primed by pouring approximately 300 ml of water into the flue spigot. Do not allow any water to fall into the air inlet.

6.3 Air supply/flue gas connections

6.3.1 Connecting the flue/chimney

Fig.34 Telescopic flue

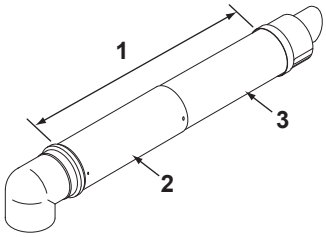

When installing internal fit telescopic flue & elbow kits 7778296 & 7778299 refer to the instructions supplied with them.

HORIZONTAL TELESCOPIC FLUE 720598701 (concentric 60/100)

1 315 mm to 500 mm
2 Connection assembly
3 Terminal assembly

There are two telescopic sections, the terminal assembly and the connection assembly, a roll of sealing tape and two self tapping screws. A 93° elbow is also supplied.

The two sections can be adjusted to provide a length between 315 mm and 500 mm when measured from the flue elbow (there is 40 mm engagement into the elbow).

1. Locate the flue elbow on the adaptor at the top of the boiler. Set the elbow to the required orientation.

Fig.35 Flue dimension X

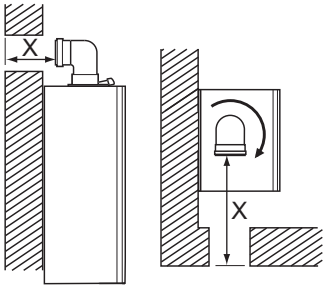

Important
The flue elbow is angled at 93° to ensure a fall back to the boiler.

2. Measure the distance from the outside wall face to the elbow. This dimension will be known as " X" .
3. If the distance from the flue elbow to the outside face of the wall is less than 250 mm the connection assembly can be discarded and the terminal assembly fitted directly into the elbow.
4. In instances where the dimension " X" is between 250 mm and 315 mm it will be necessary to shorten the terminal assembly by careful cutting to accommodate walls of these thicknesses.

Fig.36 Flue dimension Y

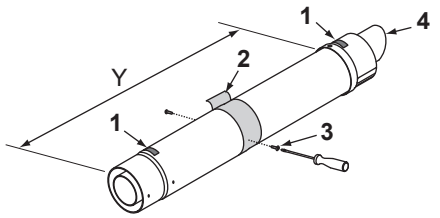

PN-0000464

Fig.37 Attaching the flue

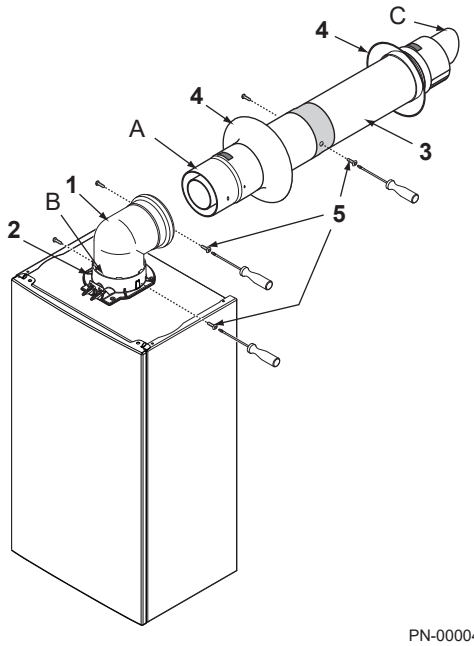

PN-0000465

5. To dimension " X" add 40 mm. This dimension to be known as "Y" .
   1 TOP label
   2 Sealing tape
   3 Securing screw
   4 Peak to be uppermost
6. Adjust the two telescopic sections to dimension "Y" and seal the joint with the tape provided. Ensure that the labels marked "TOP" on the terminal and connection assemblies are uppermost.
7. Using the clearance holes in the connection assembly secure it to the terminal assembly using the screws supplied with the telescopic flue.
8. Remove the flue elbow and insert the flue through the hole in the wall. Fit the flue trims if required, and refit the elbow to the boiler adaptor, ensuring that it is pushed fully in. Secure the elbow with the screws supplied in the boiler fitting kit.
   1 Flue elbow
   2 Boiler adaptor
   3 Telescopic flue
   4 Flue trim
   5 Securing screw
   A Apply the lubricant supplied for ease of assembly **(do not use any other type)**. Ensure flue is fully engaged into elbow.
   B Apply the lubricant supplied for ease of assembly **(do not use any other type)**. Ensure elbow is fully engaged into boiler adaptor.
   C Peak to be uppermost
9. Draw the flue back through the wall and engage it in the elbow. It may be necessary to lubricate to ease assembly of the elbow and flue.
10. Ensure that the terminal is positioned with the slots to the bottom. Secure to the elbow with the screws supplied with the telescopic flue.

Important
It is essential that the flue terminal is fitted as shown to ensure correct boiler operation and prevent water entering the flue.

11. Make good between the wall and air duct outside the building, appropriate to the wall construction and fire rating.
12. If necessary fit a terminal guard.

6.4 Electrical connections

The electrical safety of the equipment is only ensured when it is correctly connected to an effective earthing system in accordance with the prevailing safety standards for installations. The boiler must be electrically connected to a 230 V single phase + earth mains supply respecting the Line-Neutral polarity.

Caution
This connection must be made using a two-pole switch with contact opening of at least 3 mm.

If the power supply cable must be replaced, a harmonised “HAR H05 VV-F” 3x0.75 mm2 cable with a maximum diameter of 8 mm must be used.

Warning
Check that the total nominal consumption of the accessories connected to the appliance is less than 1 A. If it is higher, a relay must be installed between the accessories and the electronic board.

Fig.38 Accessing the circuit board

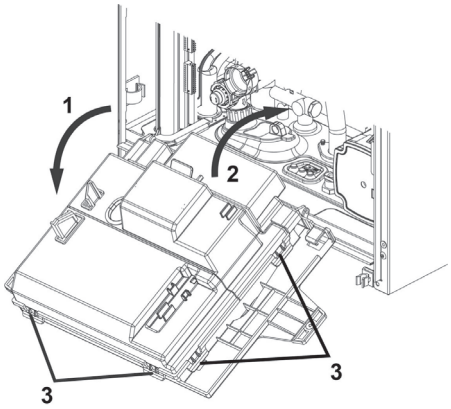

6.4.1 Accessing the electrical connections

See
Section 10.3.1 Accessing the boiler components to remove the front cover

To access the electrical connection board:

1 Pull the control panel downwards (1).
2 Lift the rear cover (2).
3 Release the catches to remove the cover (3).

Important
Do not use excessive force as this could break the plastic hooks.

The supply cable is connected to the connection PCB using the CB1 connection (Fig. 39).

The connections are as follows:

L: 230 V (brown wire)

N: Neutral (blue cable)

⏚ : Earth connection:

Fig.39 Connecting the room thermostat RT

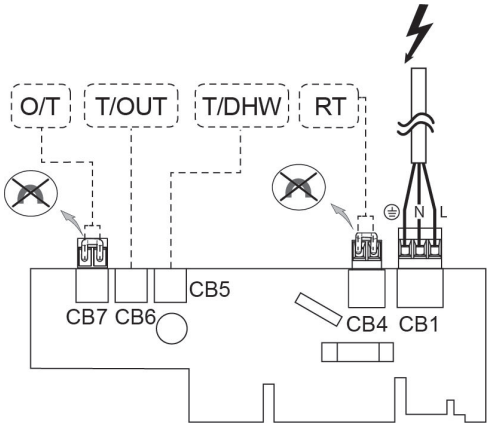

6.4.2 Connecting the room thermostat

Before connecting the room thermostat (RT) or Open Therm (OT) device, remove the link wire on the terminal board as shown in figure 39.

6.4.3 Service connection (SERVICE)

Connect the wireless interface to terminal **X10** on the boiler PCB, as shown in the chapter entitled "Electrical diagram".

6.4.4 Connecting on wall outdoor sensor

Fig.40 Sensor position

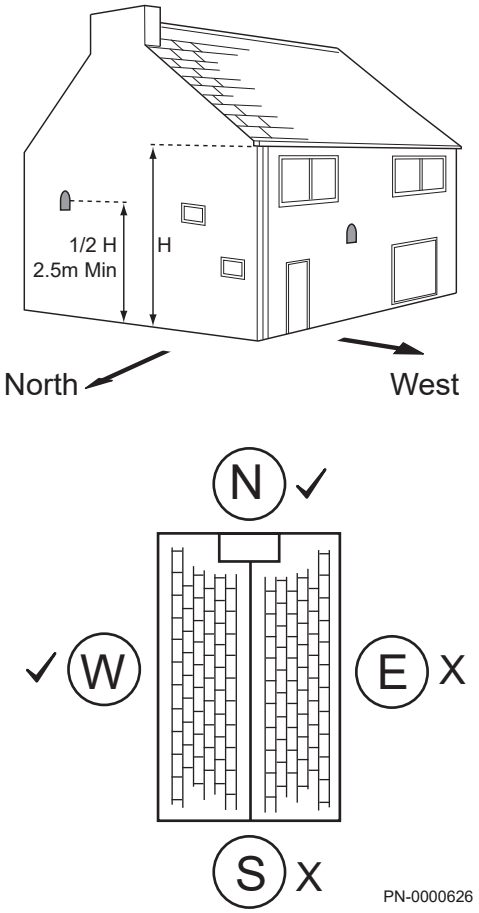

The sensor must be fixed to an external wall surface of the property it is serving. The wall must face north or west. Under no circumstance must it be fixed to a south facing wall in direct sunlight.

The sensor must be positioned approximately at half the height of the living space of the property, and a minimum of at least 2.5 metres above ground level.

To ensure accurate operation do not position the sensor in the proximity of any heat or cooling source (e.g. a flue terminal). Siting above doors & windows, adjacent to vents and close to eaves should be avoided.

1. Once the position has been determined, prise the cover off the sensor and mark through the sensor body the two fixing holes and the larger hole for the wiring.
2. Drill & plug the two fixing holes (plugs and screws are supplied with the sensor). Also drill the hole for the sensor wiring.
3. Insert the sensor wiring through the hole in the wall, leaving sufficient length outside to allow connection. Seal the hole.
   Note: 0.5 mm 2 core cable is recommended (the sensor is a low voltage device). This wiring is NOT supplied in the kit.
4. If it is not possible to pass the wiring through the wall directly behind, remove the circular ‘knock-out’ panel in the sensor base to allow connection.
5. Using the screws provided fit the body to the wall. Insert the wires in the two-way terminal block and secure them. Replace the sensor cover.
6. Ensure the electrical supply to the boiler is isolated and remove the front panel.
7. Hinge down the control box and unclip the connection board cover.
8. Pass the wires from the sensor through the cable gland in the bottom of the boiler lower panel, leaving sufficient slack to allow the control box to be hinged fully open.

6.4.5 Connecting the outside sensor (OS)

Fig.41 Connecting the outside sensor (OS)

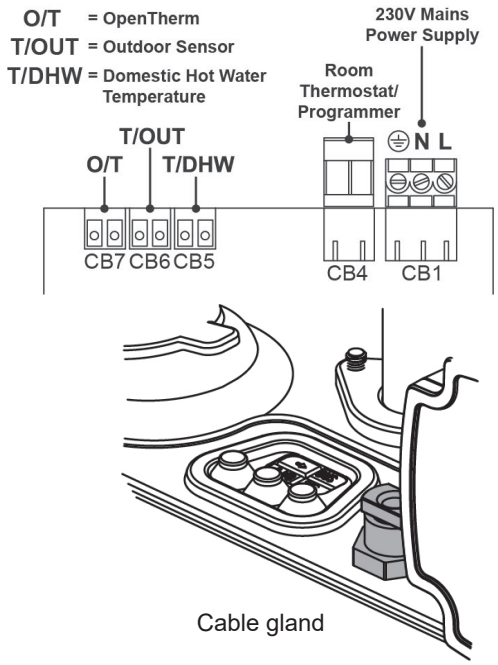

Connect the outdoor sensor on terminal CB6 (T/OUT) of the connection board as shown in Fig. 41.

Important
Set the type of outside sensor used by implementing setting AP056 (see table paragraph "List of installer settings").

For more information, see
The instructions supplied with the sensor.

6.4.6 Identifying label

Important
The identifying label (7221476-01) supplied with the outdoor sensor must be signed and affixed on or adjacent to the boiler. The label must be readily accessible without removing the boiler casing or any other disassembly. This label is required to enable SAP and energy assessors to identify that a weather compensation device is installed and connected .

6.5 Filling the installation

6.5.1 Flushing the system

Flush thoroughly and treat the system according to guidance given in BS 7593.

6.5.2 Fill the installation

Fig.42 Filling the installation

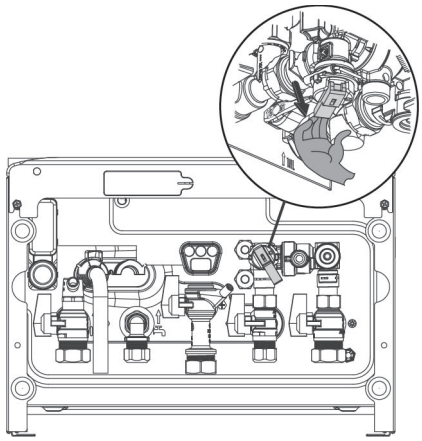

A filling point connection on the central heating return pipework must be provided to facilitate initial filling and pressurising and also any subsequent water loss replacement/refilling.

1. Fill the installation using approved equipment and in accordance with all relevant water supply regulations.

Important
Your attention is drawn to:
for GB: Guidance G24.2 and recommendation R24.2 of the Water Regulations Guide.
for IE: the current edition of I.S. 813 "Domestic Gas Installations" .

2. The sealed primary circuits may be filled or replenished by means of a temporary connection between the circuit and a supply pipe, provided a ‘Listed’ double check valve or some other no less effective backflow prevention device is permanently connected at the inlet to the circuit and the temporary connection is removed after use.
3. Fill or replenish the sealed primary circuits by means of a temporary connection between the circuit and a supply pipe:
   - Permanently connect a ‘Listed’ double check valve or some other no less effective backflow prevention device at the inlet to the circuit.
   - Remove the temporary connection after use except if where a permanent connection is used.

6.5.3 Filling the condensate trap

1. Check that the boiler condensate trap has been primed before commissioning the boiler.

6.6 Draining the installation

Fig.43 Draining the installation

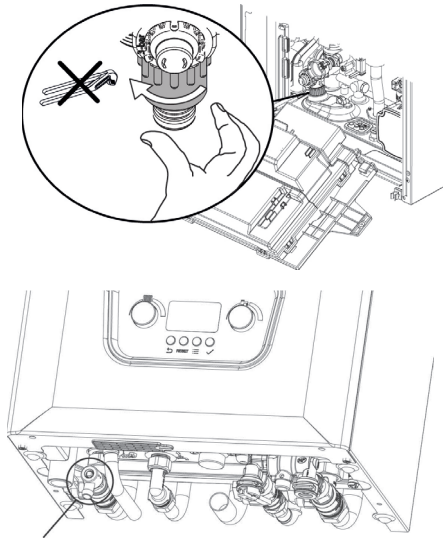

The boiler can be drained via the pressure relief valve. Check routing is suitable for draining primary system water

1. Remove the front panel and lower the controls.
2. Slowly open the drain anti-clockwise by hand. Do not use tools.
3. Close the drain by turning clockwise. Do not over tighten.

There is also a drain point fitted on the central heating flow isolation cock.

7 Commissioning

7.1 General

Commissioning the boiler is done for first time use, after a prolonged shut-down (more than 28 days) or after any event that would require complete re-installation of the boiler. Commissioning of the boiler allows the user to review the various settings and checks to be made to start up the boiler in complete safety.

7.2 Checklist before commissioning

Perform the following checks before commissioning the boiler:

1. Check that the gas type supplied matches the data shown on the boiler's data plate.

Danger
Do not commission the boiler if the gas supplied does not match the gas types approved for the boiler.

2. Check the connection of the earthing cable.
3. Check the gas circuit from the non-return valve to the burner.
4. Check the hydraulic circuit from the boiler's isolation valves to the heating circuit.
5. Check that the hydraulic pressure in the heating installation is between 1.0 and 1.5 bar.
6. Check the power supply connections to the various boiler components.
7. Check the electrical connections on the thermostat and the other external components.
8. Check the ventilation in the room in which the system is installed.
9. Check the flue gas connections.

7.3 Commissioning procedure

Proceed as described below to commission the boiler:

Open the main gas cock.
Open the gas cock on the boiler.
Open the front panel as described in the chapter entitled "Accessing the boiler electrical connection board".
Check the gas supply pressure at the pressure socket on the gas valve.
Check the leak tightness of the gas connections in the boiler upstream of the gas valve.
Check the tightness of the gas pipe, including the gas valves. The test pressure must not exceed 60 mbar (6 kPa).
Purge the gas supply pipe by unscrewing the pressure socket on the gas valve. Reclose the socket once the pipe has been sufficiently bled.
Check that the siphon is full of water as described in the chapter entitled "Filling the siphon".
Check that there are no leaks in the hydraulic connections.
Check the seal/condition of the flue gas pipes.
Use the two-pole switch to supply voltage to the boiler.

Important
For instructions on igniting the boiler, see the following chapter entitled “Procedure for first start-up”.

7.4 Gas settings

7.4.1 Checking the working gas inlet pressure and gas rate

Fig.44 Gas meter to valve

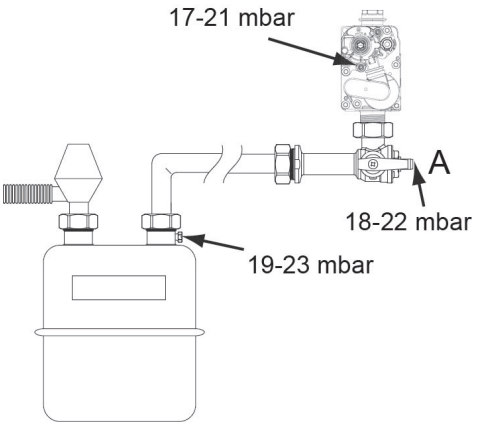

Fig.45 Gas inlet test point

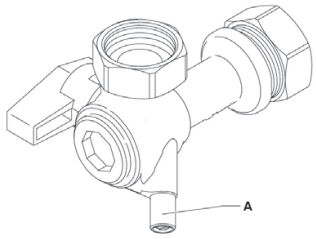

Note
If the pressure drops are greater than shown in the diagram oppo-site, a problem with the pipework or connections is indicated. Permissible pressure drop across system pipework ≤ 1 mbar. Carry out chimney sweep.

See
Activating the chimney sweep function, page 47.

1. With the boiler operating in the maximum rate condition check that the operational (working) gas pressure at the inlet gas pressure test point is in accordance with BS 6798 & BS 6891. This must be AT LEAST 18 mb (Natural Gas) or 37 mb (LPG) !
2. Ensure that this inlet pressure can be obtained with all other gas ap pliances in the property working. The pressure should be measured at the gas test point on the gas inlet (A).
3. Measure the gas rate— With any other appliances & pilot lights turned OFF the gas rate can be measured. It should be:-

Tab.23

	Natural gas	LPG
24	2.61 m^3/h	1.92 kg/h
30	3.26 m^3/h	2.40 kg/h
36	3.90 m^3/h	2.86 kg/h

Fig.46 Type of fittings - flue gas measuring point

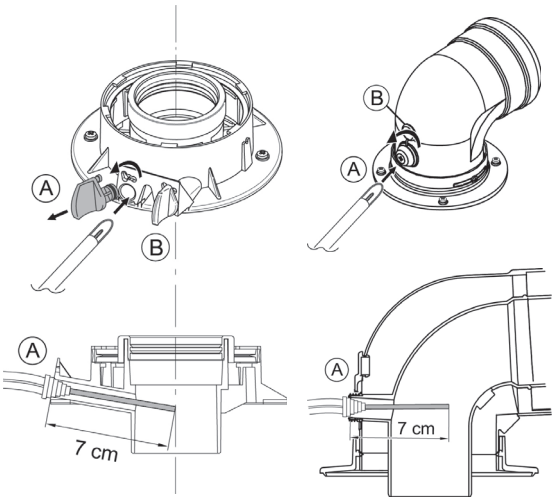

7.4.2 Combustion parameters

The boiler has two dedicated sockets in order to measure the combustion efficiency and cleanliness of the combustion exhaust gases during operation. One socket is connected to the flue gas exhaust circuit (A) which is used to detect the cleanliness of the combustion exhaust gases and the combustion efficiency. The other is connected to the combustion air intake circuit (B) which is used to check for the possible recirculation of the combustion exhaust gases in the case of coaxial pipes. The following parameters can be measured when using the socket connected to the flue gas circuit:

temperature of the combustion exhaust gases;
concentration of oxygen O_2 or alternatively carbon dioxide CO_2;
concentration of carbon monoxide CO.

The temperature of the combustion air must be measured using the socket connected to the air intake circuit (B), inserting the measurement probe approx. 7 cm.

In order to analyse the combustion exhaust gases, the chimney sweep function must be activated, as described below.

Fig.47 Examples of combustion checks

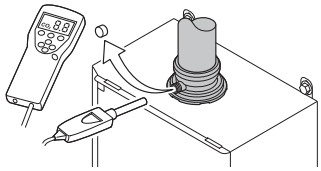

Caution
To analyse the products of combustion, ensure adequate heat exchange in the system in heating mode or in domestic water mode (by opening one or more domestic hot water cocks) to avoid the boiler shutting down as a result of overheating. For correct boiler operation, the CO_2 (O_2) content in the combustion gases must be within the tolerance range in section 7.4.3.

Fig.48 Minimum power

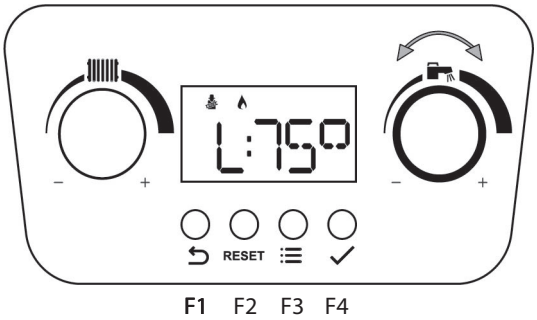

Activating the chimney sweep function

1. Press the two **F1** + **F2** keys until the function activates.
   When the letter **L** appears on the display (followed by the flow temperature) the boiler is working at minimum power.

Fig.49 Maximum power in heating mode

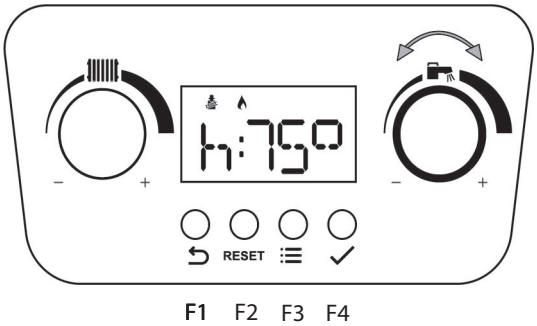

2. Turn the knob one notch to the right.
   When the letter **h** appears on the display (followed by the flow temperature) the boiler is working at maximum power in HEATING MODE.

Fig.50 Maximum power in domestic water mode

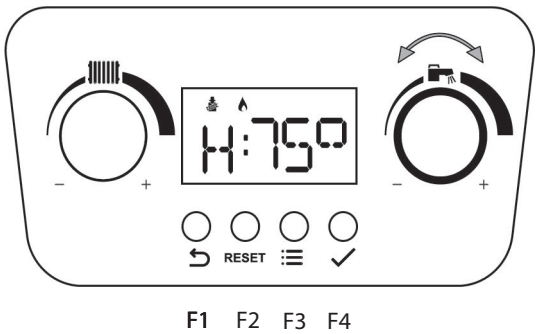

3. Turn the knob another notch to the right. When the letter **H** appears on the display (followed by the flow temperature) the boiler is working at maximum power in DOMESTIC WATER MODE.

Important
This function is carried out in heating mode. During this function, for LOW TEMPERATURE systems (such as underfloor heating), the flow temperature is limited by setting **CP000** (maximum flow temperature).

To activate the domestic water mode, configure the setting to **GP082=1** Once finished, return the setting to **GP082=0**
⇨ To finish and exit the function press the **F1** key.

Caution
Remember to return the setting to **GP082=0** once the chimney sweep function is no longer in use.

Warning
Ensure that both flue test point plugs are in place after checking combustion.

7.4.3 LPG conversion procedure

Note: G20 = NG G31 = LPG

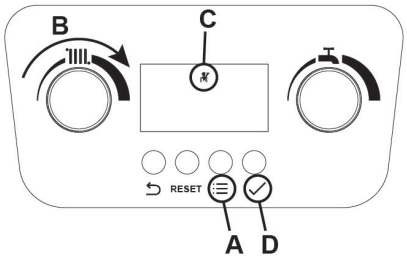

1. Press the Menu button (A). Scroll using the heating knob (B) until just the installer-level parameter icon (C) is shown on the top row of the display. Press the confirm button (D).

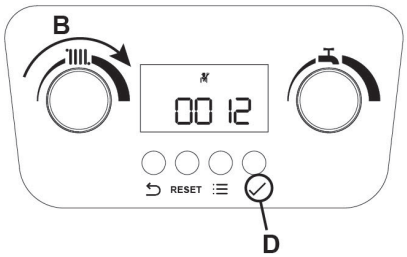

2. Scroll using the heating knob (B) until ‘0012’ is displayed. Press the confirm button (D).

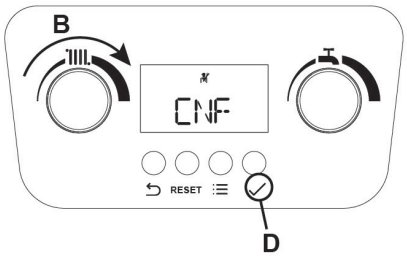

3. Scroll using the heating knob (B) until ‘CNF’ is displayed. Press the confirm button (D). A boiler-specific value will be displayed, e.g. ‘CN 1:51’

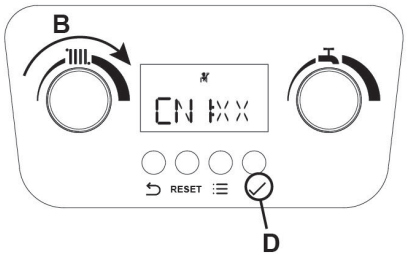

4. With the boiler-specific value displayed scroll the heating knob (B) until the appropriate value for LPG operation is displayed - see ‘CN1’ value on the boiler data label. Press the confirm button (D).

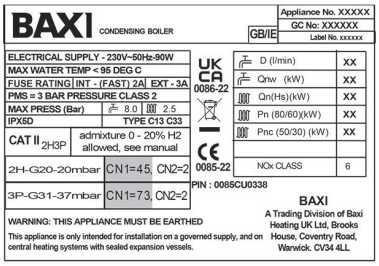

5. The boiler will enter the initialisation and de-aeration mode. When this is complete the gas flow rate setting screw must be adjusted. Using a 4mm hexagon key rotate screw ‘V’ one full turn anticlockwise.

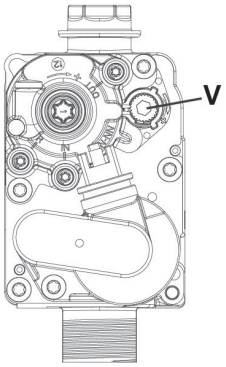

Frontal panel closed			
CO2% nominal & range of tolerance **(24 & 30 models)**		O2% nominal & range of tolerance **(24 & 30 models)**	
Max	Min	Max	Min
10.3% (10.2 to 10.7)	9.7% (9.2 to 9.8)	5.2% (5.4 to 4.6)	6.1% (6.9 to 6.0)

Frontal panel closed			
CO2% nominal & range of tolerance **(36 models)**		O2% nominal & range of tolerance **(36 models)**	
Max	Min	Max	Min
10.0% (10.0 to 10.5)	9.6% (9.2 to 9.8)	5.7% (5.7 to 4.9)	6.3% (6.9 to 6.0)

6. Check the boiler combustion. If it is not correct adjust the flow rate screw again in small increments until satisfactory combustion is achieved.

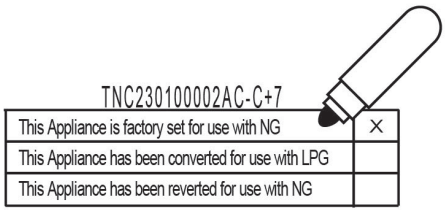

7. Using a suitable indelible pen delete the NG line from the conversion label and mark the box for LPG to indicate conversion. It is possible to convert the appliance back to NG if required as described above.

Fig.52 Combustion procedure

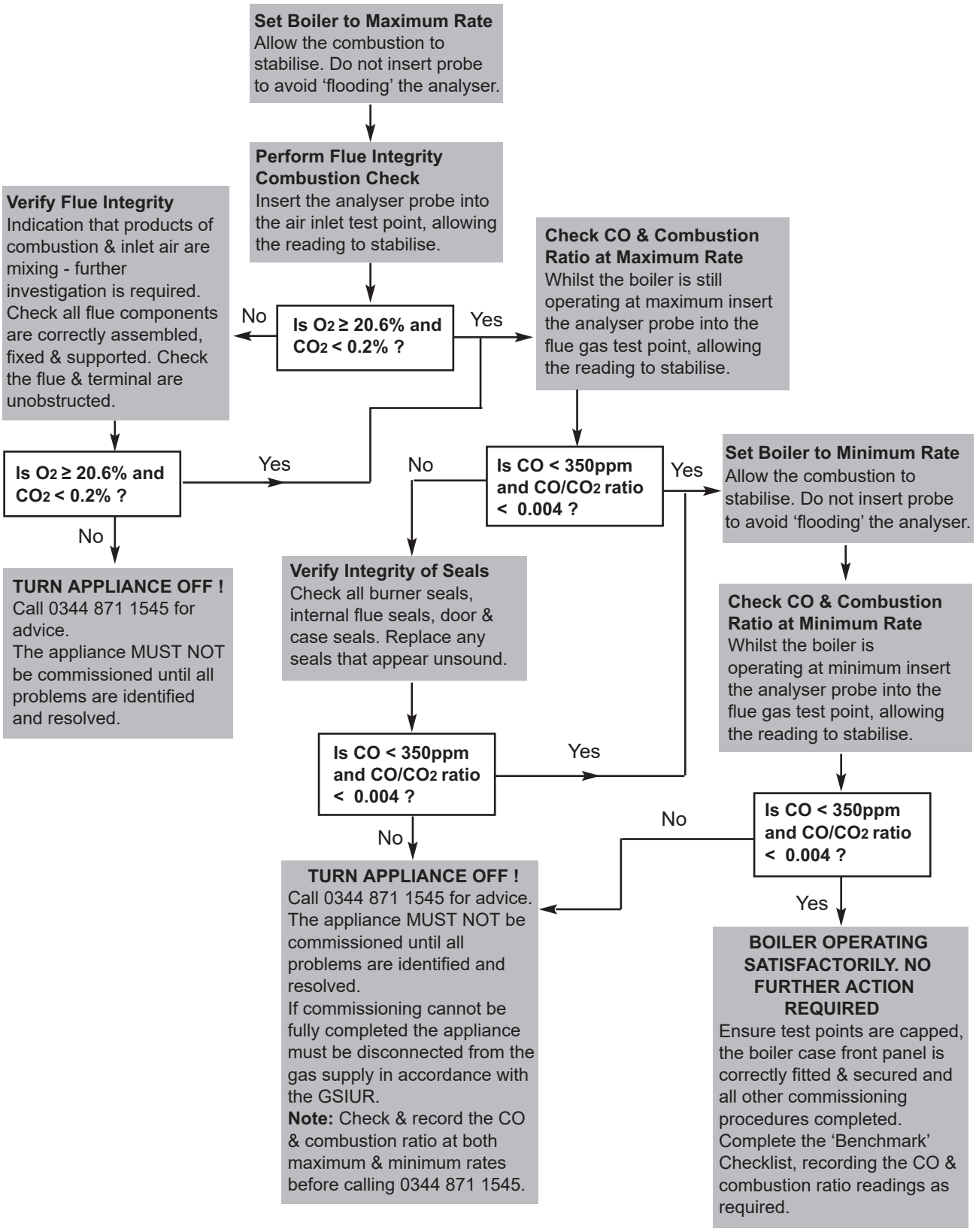

7.4.4 Service settings

	Fan parameters - rpm								Frontal panel closed				
	24 COMBI				30 COMBI				CO2% Nominal & range of tolerance		CO max	O2% Nominal & range of tolerance	
	DP003*	GP007*	GP008*	GP009	DP003*	GP007*	GP008*	GP009	@Pn Max	@Pmin	ppm	@Pn Max	@Pmin
	24 kW	20 kW	4,8 kW	Ignition	30kW	25 kW	5,8 kW	Ignition					
			-	-			-	-					
G20	8200	7000	2550	4300	9300	7950	2700	4300	9,0% (8,8 - 9,4)	8,5% (8,1 - 8,6)	<400	4,8% (5,2 ÷ 4,1)	5,7% (6,5 ÷ 5,6)
G31	7900	6800	2500	4300	9100	7650	2600	4300	10,3% (10,2 - 10,7)	9,7% (9,2 - 9,8)	<400	5,2% (5,4 ÷ 4,6)	6,1% (6,9 ÷ 6,0)

	Fan parameters - rpm				Frontal panel closed				
	36 COMBI				CO2% Nominal & range of tolerance		CO max	O2% Nominal & range of tolerance	
	DP003*	GP007*	GP008*	GP009	@Pn Max	@Pmin	ppm	@Pn Max	@Pmin
	36 kW	25 kW	7,2 kW	Ignition					
			-	-					
G20	10200	7250	2800	4800	9,0% (8,8 - 9,4)	8,5% (8,1 - 8,6)	<400	4,8% (5,2 - 4,1)	5,7% (6,5 - 5,6)
G31	9800	7000	2800	4800	10,0% (10,0 - 10,5)	9,6% (9,2 - 9,8)	<400	5,7% (5,7 - 4,9)	6,3% (6,9 - 6)

* When using mixes that are up to 20% hydrogen (H_2), for calibrating the gas valve only refer to the value of O_2%.

Important
This appliance is suitable for G20 gas containing up to 20% hydrogen (H_2). Due to variations in the percentage of H_2, the percentage of O_2 may vary over time. (For example: 20% of H_2 in the gas may lead to a 1.5% increase of O_2 in the flue gases) The gas valve may need to be adjusted more accurately. This must be adjusted using standard O_2 values for the gas used.

Fig.51 Gas valve

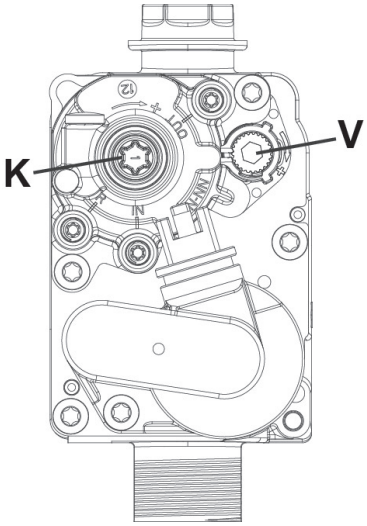

7.4.5 Adjusting the gas valve

V Gas flow rate setting screw - 4 mm Allen key
K OFFSET setting screw - Torx 40 (T40)

Remove the boiler door to take measurements or make adjustments.

- Calibration of the MAXIMUM heat input
  Check that the CO_2 measured in the exhaust pipe, with the boiler operating at maximum heat input, is as indicated in the table entitled "Service settings".
- If incorrect:
  Put the boiler into chimney sweep high mode "H". Let the CO_2 value stabilise.

  Important
  Remove the Allen key to stabilise the CO_2 value if adjustment is required.
- Adjust the setting screw (V) located on the gas valve. Turn the screw clockwise to increase the content of CO_2 and anti-clockwise to decrease it.

Baxi Combi		824 - 836
CO_2	% (maximum)	8.8 to 9.4

* Values for G20 gas type only. For G20+20%H2 calibration of the gas valve refer to O_2%.

- Calibration of the REDUCED heat input
  Check that the measurement in the exhaust pipe, with the boiler operating at minimum heat input, is as indicated in the table entitled "Service settings".

  If incorrect:
- Remove the Offset setting screw plug (K) using the Torx driver.
  The Offset setting screw is accessible after removing the Offset setting screw plug (K).
  Put the boiler into chimney sweep low mode. Let the CO_2 value stabilise.

  Important
  Remove the Torx driver to stabilise the CO_2 value if adjustment is required.
- Adjust the Offset setting screw located on the gas valve. Turn the screw clockwise to increase the content of CO2 and anti-clockwise to decrease it.

Baxi Combi		824 - 836
CO_2	% (minimum)	8.1 to 8.6

* Values for G20 gas type only. For G20+20%H2 calibration of the gas valve refer to O_2%.

7.5 Final instructions

Fig.53 People

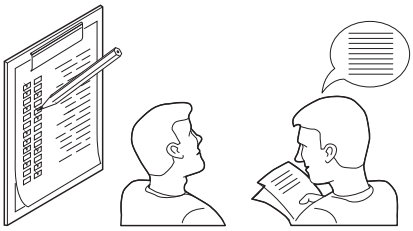

7.5.1 Handover

1. Carefully read and complete all sections of the Benchmark Commissioning Checklist at the rear of this publication that are relevant to the boiler and installation. These details will be required in the event of any warranty work.

Important
The warranty will be invalidated if the Benchmark section is incomplete.

2. The publication must be handed to the user for safe keeping and each subsequent regular service visit recorded.
3. Hand over the User Quick Start Guide, Installation and Servicing Manual, giving advice on the necessity of regular servicing.
4. **For IE,** it is necessary to complete a "Declaration of Conformity" to indicate compliance with I.S. 813. An example of this is given in I.S. 813 "Domestic Gas Installations" . This is in addition to the Benchmark Commissioning Checklist.
5. Set the central heating and hot water temperatures to the requirements of the user. Instruct the user in the operation of the boiler and system.
6. Instruct the user in the operation of the boiler controls.
7. Demonstrate to the user the action required if a gas leak occurs or is suspected. Show them how to turn off the gas supply at the meter control, and advise them not to operate electric light or power switched, and to ventilate the property.
8. Show the user the location of the system control isolation switch, and demonstrate its operation.
9. Advise the user that they may observe a plume of vapour from the flue terminal, and that it is part of the normal operation of the boiler.

8 Operation

8.1 Use of the control panel

Fig.54 Accessing the menu

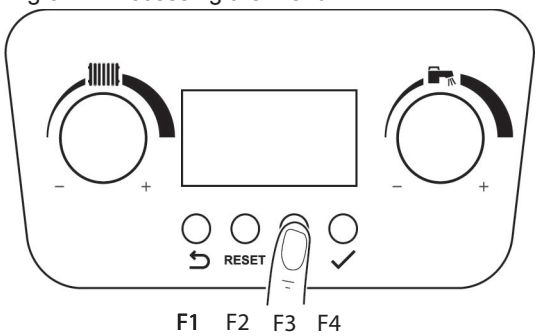

Fig.55 Scrolling through the menus and/or settings

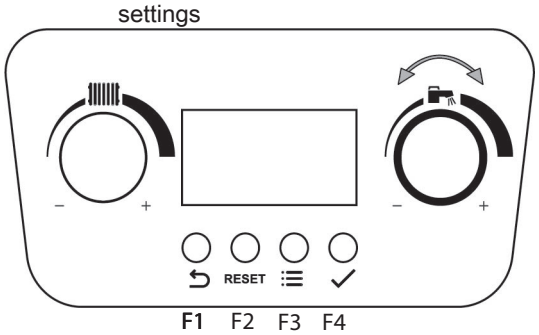

Fig.56 Scrolling through the values

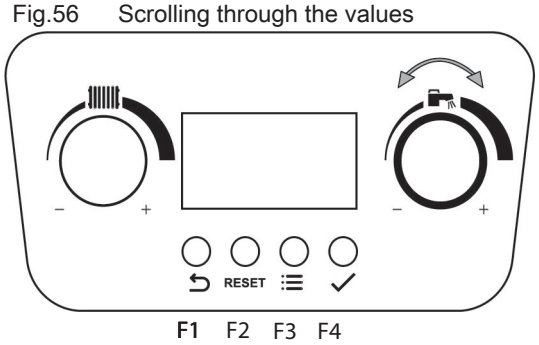

Fig.57 Scrolling through the values

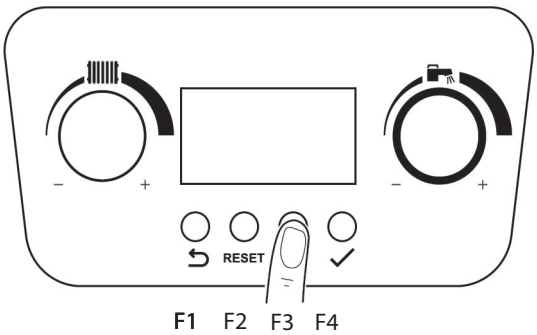

8.1.1 Browsing the menus

1. To activate the control unit, press any button.
2. To access the settings available from the menu, press the **F3** key.
   Tab.26 Available menu options

	Information menu
	User menu
	Installer menu
	Error menu
	Counter menu

3. Turn the knob to select the menu or to scroll through the settings.
4. Press the **F4** key to confirm selection of the required menu.
5. Turn the knob to scroll through the list of settings. Press the **F4** key to confirm selection of the setting.
6. Turn the knob to modify the setting. Press the **F4** key to confirm the setting has been changed.
7. Press the **F1** key to return to the home screen.

Important
The display shows the home screen if no keys are pressed for two minutes. If this happens, the procedure needs to be repeated.

8.1.2 Running the automatic detection function

After removing or replacing a PCB accessory board (not main PCB), an auto-detect must be carried out.

1. Select the installer menu and type in the password to enter
2. Turn the knob until **AD** is displayed
3. Press the F4 button and **-AD-** appears on the display
4. Press the **F4** knob again to activate the function

8.1.3 Information menu display

1. Navigate to the Information menu .
2. Press the **F4** key to open the menu.
3. Turn the knob to scroll through the values.
4. Press the **F1** key several times to go back to the home screen.

■ Counter menu display

1. Navigate to the Counter menu.
2. Press the **F4** key to open the menu.
3. Turn the knob to scroll through the values.
4. Press the **F1** key several times to go back to the home screen.

8.2 Start-up

8.2.1 Procedure for first start-up

The following information appears on the display when the boiler is electrically powered:

1. The message "**INIT**"" appears, indicating that the "Initialisation" phase is active (a few seconds);
2. The software version **"Vxx.xx."** appears (two seconds);
3. The software version for boiler settings **"Pxx.xx."** appears (two seconds);
4. The boiler and heating installation venting phase has started. During operation, the display shows in alternate mode "– – – – – – – –", the word “DEAIR” and the pressure value for the heating circuit. This phase lasts 6 minutes and 20 seconds, at the end the boiler is ready for operation;
5. The bar symbol and the **"x.x"** installation water pressure value appear.

In the event of a power outage the procedure will be repeated from the beginning.

To activate a heating request, the room thermostat must be set to a temperature above the current temperature (or open a domestic water tap.)

8.2.2 Changing the heating flow temperature

Fig.58 Scrolling through the menus and/or settings

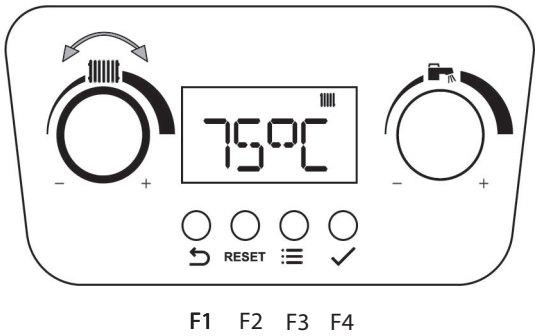

1. Use the knob to adjust the flow temperature in heating mode.
   - Turn the knob anti-clockwise to reduce the temperature value. Turn
   - the knob clockwise to increase the temperature value.

Important
With an outside sensor connected it is possible to lower the setpoint value.

2. Press the **F4** key to confirm the value or wait a few seconds until the value is automatically saved.

Important
The flow temperature is matched automatically when using a:

- Weather-dependent regulator.
- **OpenTherm** regulator.

8.2.3 Changing the domestic hot water (DHW) temperature

Fig.59 Scrolling through the menus and/or settings

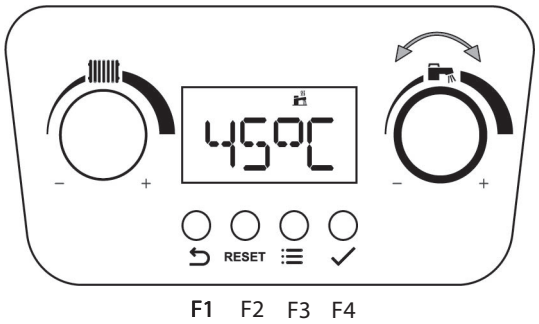

1. Use the knob to adjust the domestic hot water temperature.
   - Turn the knob anti-clockwise to reduce the temperature value.
   - Turn the knob clockwise to increase the temperature value.

2. Press the **F4** key to confirm the value or wait a few seconds until the value is automatically saved.

8.3 Shutdown

8.3.1 Switching off the heating and domestic hot water (DHW)

Heating mode can also be disabled by turning the knob anti-clockwise until the word **OFF** appears on the display.

Important
When heating mode is re-enabled check, by turning the knob, that the comfort temperature is that requested.

Important
Heating is disabled but the frost protection function remains activated.

Domestic hot water mode can also be disabled by turning the knob anti-clockwise until the word **OFF** appears on the display.

To switch the boiler off completely, switch off the power supply to the appliance and close the gas cock.

Important
In this condition, the boiler and the heating installation are not protected against frost.

8.4 Deaeration function

The purpose of this function is to deaerate the heating installation. After installing the boiler, the function activates immediately when the boiler is first started up. The function automatically activates each time the boiler power supply is turned off and then on again.
To start the function manually:

- Access the installer menu and enter the password.
- Turn the knob until **"DEAIR"** is displayed.
- Press the F4 knob and **-AIR-** appears on the display
- Press the **F4** knob again to activate the function.

8.5 Frost protection

It is a good idea to prevent the heating installation from draining completely, as changing the water can result in unnecessary and damaging limescale deposits from forming inside the boiler and heating elements. If the thermal installation is not intended to be used during the winter months and there is a risk of frost, we recommend mixing suitable antifreeze solutions designed for a specific purpose (e.g. propylene glycol, which contains limescale and corrosion inhibitors) into the water in the installation. The boiler's electronic control system is equipped with an "antifreeze" function for the heating system. This function activates the boiler pump when the heating system flow temperature falls below 7 °C. If the water temperature reaches 4 °C, the burner is switched on, bringing the system water to a temperature of 10 °C. When this value is reached the burner switches off and the pump continues to operate for another 3 minutes.

Important
The frost protection function will not work if there is no power being supplied to the boiler or if the gas supply cock is closed.

9 Settings

9.1 Accessing the settings

Fig.60 Step 2

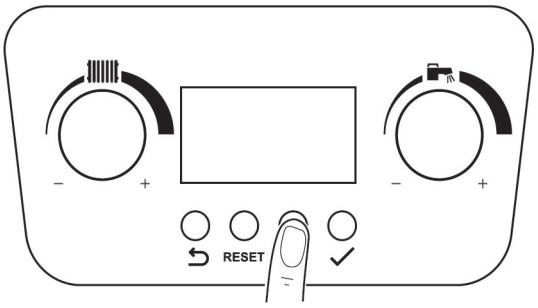

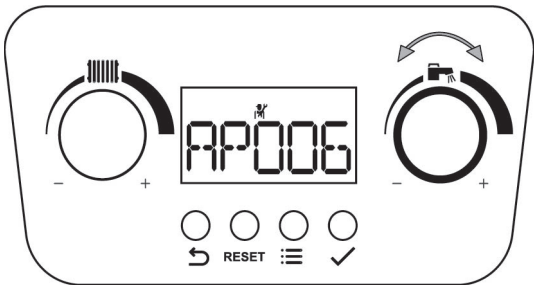

To display/change the list of SERVICE settings, proceed as follows:

- press the **F3** key, the symbol on the menu bar starts to flash;
- turn the knob until you reach the symbol to access user settings, turn until you reach the symbol to access installer settings, then press the **F4** key to confirm;
- if accessing the installer menu, use the knob to enter code **0012** and confirm by pressing the **F4** key
- turn the knob until you reach the desired setting, then press the **F4** key to confirm;

- modify the value of the setting using the knob;
- press **F4** to confirm;
- press F1 to exit.

Danger
FOR LOW TEMPERATURE HEATING INSTALLATIONS MODIFY SETTING CP000 ACCORDING TO THE MAXIMUM FLOW TEMPERATURE.

Important
The factory settings for certain settings may differ based on the market the product is destined for.

9.2 List of parameters

Tab.27 Table of parameters

Name	Description	Factory value	Minimum	Maximum	Level
AP073	Average external temperature [°C] when switching from summer/winter mode (with outside sensor)	22	10	30	User
AP079	Building insulation level (with outside sensor) 0: Poorly insulated building 15: Well insulated building	3	0	15	Installer
CP000	Max. settable heating setpoint temperature [°C]	80	25	80	Installer
CP020	Zone function 0: Disabled 1: Enabled	1	–	–	Installer
CP210	Comfort mode heating curve offset (with outside sensor)	15	15	90	Installer
CP230	Heating curve slope (with outside sensor)	1.5	0	4	Installer
CP470	Number of days required for the screed drying program	0	0	30	Installer
CP480	Screed drying starting temperature [°C]	20	20	50	Installer
CP490	Screed drying stop temperature [°C]	20	20	50	Installer
CP780	Zone control strategy selection 0: Automatic 1: Room Temp. based 2: Outdoor Temp. based 3: Outdoor & room based	0	–	–	Installer

Danger
For low temperature heating installations, modify the **CP000** parameter according to the maximum flow temperature.
The factory settings for certain settings may differ based on the market the product is destined for.

9.2.1 Resetting factory settings

To reset the factory settings, modify the **CN1** and **CN2** settings with the data on the boiler data plate.

9.3 Setting the parameters

Fig.61 Outside sensor connection

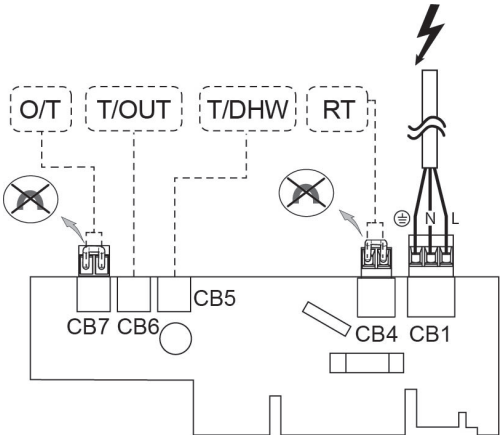

9.3.1 Setting the heating curve

Connect the outside sensor to terminal CB6 and connect the "On/Off" type room thermostat or the "Open Therm" type room unit to terminal CB7 of the connection board after having removed the jumper.

Important
If the heat curve is set via an OpenTherm room unit, do not set the heat curve with these parameters.

The procedure for accessing the settings is the same as that described in the previous paragraph. To set the curve, change the following settings:

- CP000: Heating flow maximum temperature set point.
- CP210: comfort mode climatic curve offset from 15 to 90 (with
- external probe). Do not change the slope of the curve.
  CP230: setting of the slope of the climatic curve from 0.0 to 4.0.

Fig.62 Heating curve graph

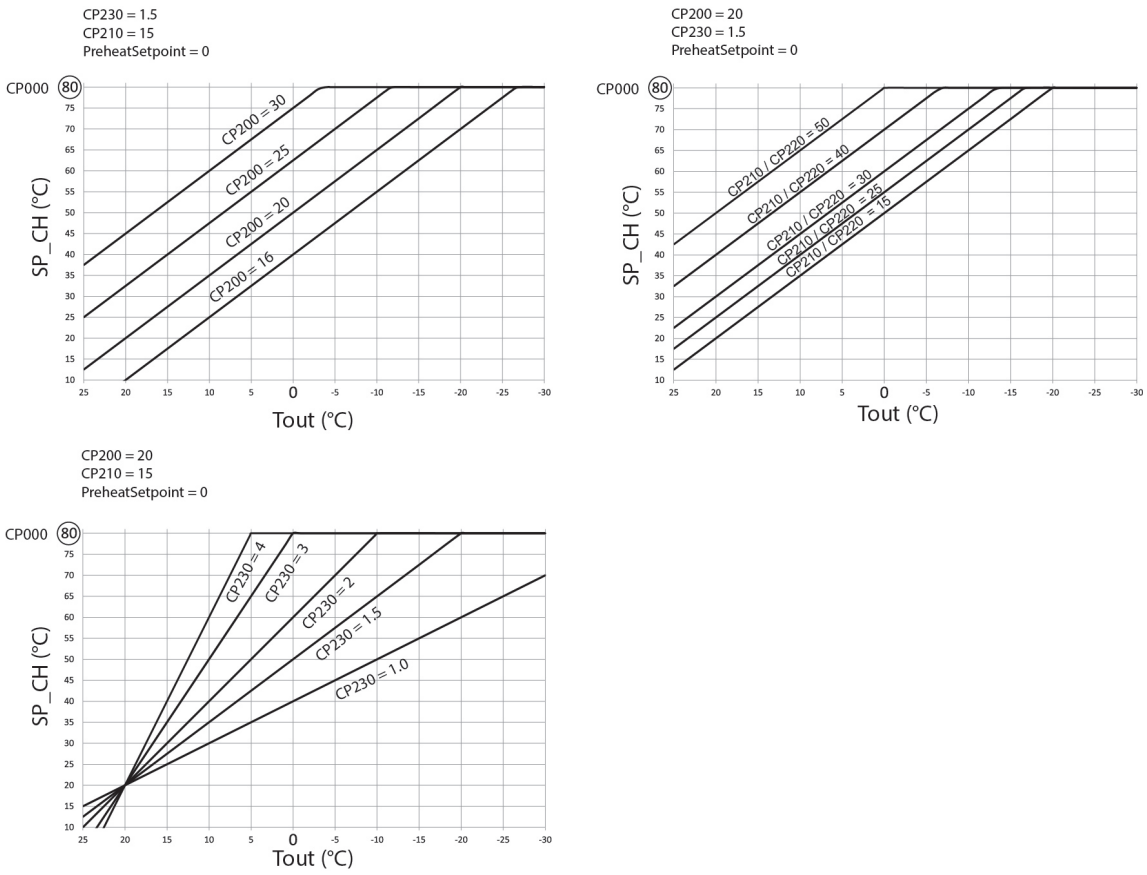

- **Tout**: temperature detected by the outside sensor (° C)
- **SP_CH**: Heating flow temperature setpoint (°C)

9.4 Reading out measured values

Fig.63 INFO menu access

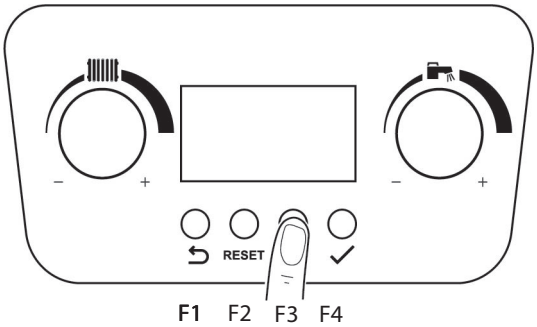

Proceed as described below to access the info menu:

- Press the **F3** key;
- The ⓘ symbol flashes on the display;
- Press the **F4** key to access the **INFO** menu;
- Turn the knob to view the settings;
- Press the **F1** key to exit.

Tab.29 Read-only parameter list (not editable)

Setting (read only)	Description	Value
AM001	DHW (Domestic Hot Water) mode enabled (0: Disabled, 1: Enabled)	0/1
AM010	Pump speed (0 ÷ 100%)	%
AM011	Service required (0: Disabled, 1: Enabled)	0/1
AM012	Status of appliance	List of statuses
AM014	Sub Status of appliance	List of sub-statuses
AM015	Pump operation (0: Disabled, 1: Enabled)	0/1

Setting (read only)	Description	Value
AM016	Flow temperature	°C
AM018	Return temperature	°C
AM019	Actual water pressure in central heating system	bar
AM024	Current output of the boiler	0/100%
AM027	Outside temperature	°C
AM036	Flue gas temperature	°C
AM037	Status of the 3-way valve (0: Heating, 1: DHW)	0/1
AM040	Outgoing DHW temperature check	°C
AM091	Season mode (0: winter, 3: summer)	0/3
AM101	Internal set point	°C
BM000	DHW temperature	°C
CM030	Current room temperature for zone	°C
CM120	Current operating mode in the zone (0: Disabled, 1: Enabled)	0/1
CM190	Zone ambient set point	°C
CM210	Outside temperature in the zone	°C
CM280	Zone calculated set point	°C
DM001	Temperature of the DHW tank	°C
DM002	Outgoing DHW flow speed	l/min
DM005	Solar system DHW temperature	°C
DM009	Primary operating mode (0: Programming, 1: Manual, 2: Antifreeze/Holiday)	0/1/2
DM019	DHW mode active (1: Comfort, 2: Low, 3: Holiday, 4: Antifreeze	1/2/3/4
DM029	DHW temperature set point	°C
GM001	Actual fan RPM	rpm
GM002	Actual fan RPM setpoint	rpm
GM003	Flame detected (0: Not detected, 1: Detected)	0/1
GM004	Gas valve (0: Open, 1: Closed, 2: Off)	0/1/2
GM007	Start-up (0: Off, 1: On)	0/1
GM008	Actual flame current measured	µA
GM012	Contact release signal X16 (0: No; 1: Yes)	0/1
GM013	Boiler shutdown signal input (0: Open, 1: Closed)	0/1
GM044	Reason for shutdown checked (0: None) 1. Heating Stoppage 2. DHW Stoppage 3. Awaiting burner ignition 4. Heating flow temperature above maximum value 5. Heating flow temperature above the starting value 6. Heat exchanger temperature above the starting value 7. Average heating flow temperature value above the starting value 8. Heating flow temperature above the setpoint value 9. Temperature difference between flow and return too great 10. Heating flow temperature above the shutdown value 11. Heat request before the minimum wait time between two consecutive requests 12. Shutdown caused by flame value being too low 13. Solar temperature above the shutdown value	0/13

9.4.1 Statuses and sub-statuses

- The **STATUS** is the operating phase of the boiler at the moment
- of display. To view the status, select the parameter **AM012**. The **SUB-STATUS** is the instantaneous operation the boiler is performing at the moment of display. To view the sub-status, select the parameter **AM014**.

Tab.30 List of statuses

STATUS	
Standby	0
Heat request	1
Burner ignition	2
Operation in heating mode	3
Operation in domestic water mode	4
Burner off	5
Pump post circulation	6
Burner shutdown to reach the temperature setpoint	8
Temporary fault	9
Permanent fault (fault to be reset manually)	10
Chimney sweep function at minimum output	11
Chimney sweep function at maximum output in heating mode	12
Chimney sweep function at maximum output in domestic water mode	13
Manual heat request	15
Frost protection function active	16
Venting function active	17
Boiler reset in progress	19

Tab.31 List of sub-statuses

SUB-STATUS	
Standby	0
Wait time until next ignition in heating mode	1
Pre-ventilation	13
Burner ignition signal sent to safety core	15
Burner pre-ignition	17
Burner ignition	18
Flame check	19
Fan operation during ignition attempts	20
Operation at set temperature setpoint	30
Operation at limited temperature setpoint	31
Operation at required output	32
Level 1 gradient detected	33
Level 2 gradient detected	34
Level 3 gradient detected	35
Flame protection active	36
Stabilisation time	37
Boiler start at minimum output	38
Operation in heating mode has been interrupted by a domestic hot water request. Restart from power output in which it was interrupted.	39
Post ventilation	41
Fan off	44
Output reduction due to high flue gas temperature	45
Pump post circulation	60

9.5 Reading counters

Fig.64 Accessing the counter menu

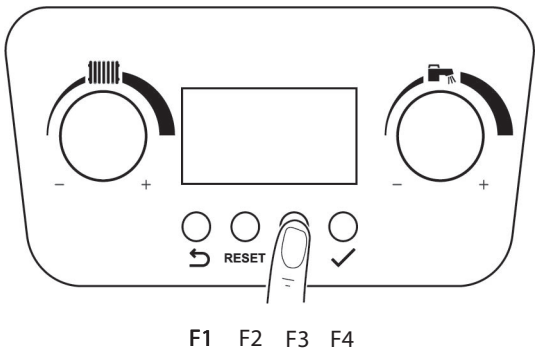

Proceed as described below to access the counter menu:

- Press the **F3** key;
- The ⓘ symbol flashes on the display;
- Turn the knob until the symbol appears, then press the **F4** key to confirm;
- Turn the knob until you reach the required counter, then press the **F4** key to confirm;
- To access the meters at the installer level, turn the knob until you reach the **SVC** symbol then press the **F4** key to confirm;
- Use the knob to enter code **0012** and confirm by pressing the **F4** key
- Turn the knob until you reach the required counter, then press the **F4** key to confirm;
- press **F1** to exit.

Tab.32 List of counters (read only)

Meters	Level	Description
AC001	User	Number of boiler power supply hours
AC016	Installer	Filling counter, counts the amount of filling cycles
AC002	Installer	Number of boiler operating hours after last maintenance operation
AC003	Installer	Number of boiler power supply hours after last maintenance operation
AC004	Installer	Failed start-up attempts after last maintenance operation
AC005	User	Indicative energy consumption [kW/h] in heating mode
AC006	User	Indicative energy consumption [kW/h] in domestic hot water (DHW) mode
AC026	Installer	Number of pump operating hours
AC027	Installer	Number of pump start-ups
CLR	Installer	Resetting of all meters (to be confirmed by pressing the **F4** key) NOTE: This parameter is only displayed if AP010 ≠ 0
DC001	Installer	Total energy consumption used by domestic hot water (DHW)
DC002	Installer	Number of domestic hot water cycles (three-way valve switching)
DC003	Installer	Number of hours in domestic hot water mode (three-way valve switching)
DC004	Installer	Number of burner start-ups for domestic hot water mode
DC005	Installer	Number of burner start-up hours for domestic hot water mode
GC007	User	Failed start-up attempts
PC001	Installer	Indicative electrical energy consumption [kW/h] in heating mode
PC002	Installer	Number of burner start-ups for heating and domestic hot water mode
PC003	Installer	Number of burner start-up hours for heating and domestic hot water mode
PC004	Installer	Burner flame leaks

10 Maintenance

10.1 General

Warning
When changing components ensure that both the gas and electrical supplies to the boiler are isolated before any work is started. When the component has been changed recommission the boiler. Always examine any seals or gaskets, replacing where necessary. The case front panel MUST seal effectively against the boiler side panels.

Warning
After servicing or performing any maintenance on the boiler ensure that

Both flue test point plugs are in place

The front cover is correctly fitted

The front cover securing screws are fully tightened

For reasons of safety, economy and maintenance of warranty it is recommended that the boiler is serviced annually. Servicing must be performed by a competent person in accordance with BS 7967-4.

After servicing, complete the relevant Service Interval Record section of the Benchmark Commissioning Checklist at the rear of this publication.

Important
During routine servicing, and after any maintenance or change of part of the combustion circuit, the following must be checked:-

The integrity of the complete flue system and the flue seals by checking air inlet sample to eliminate the possibility of recirculation. **O_2 ≥ 20.6% & CO_2< 0.2%**
The integrity of the boiler combustion circuit and relevant seals.
The operational gas inlet pressure and the gas rate.
The combustion performance as described in "Check the Combustion Performance" below.

Competence to carry out checking combustion performance BS 6798 "Specification for Installation & Maintenance of Gas Fired Boilers not exceeding 70 kWh" advises that:-

The person carrying out a combustion measurement should have been assessed as competent in the use of a flue gas analyser and the interpretation of the results.
The flue gas analyser used should be one meeting the requirements of BS 7927 or BS-EN50379-3 and be calibrated in accordance with the analyser manufacturers' requirements.
Competence can be demonstrated by satisfactory completion of the CPA1 ACS assessment, which covers the use of electronic portable combustion gas analysers in accordance with BS 7967, Parts 1 to 4.

Check the Combustion Performance (CO/CO_2 ratio) Set the boiler to operate at maximum rate.

See
Checking combustion - chimney sweep mode, page 47 for details.

Fig.65 Flue adaptor test points

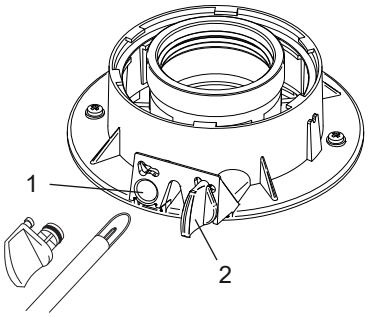

Remove the plug from the combustion test point, insert the analyser probe and obtain the CO/CO_2 ratio. **This must be less than 0.004.** If the combustion reading (CO/CO_2 ratio) is greater than this, and the integrity of the complete flue system and combustion circuit seals has been verified, and the inlet gas pressure and gas rate are satisfactory either:-

Perform the "Standard Inspection and Maintenance" .
Perform "Setting the Gas Valve" .
Replace and set the gas valve.

1 Combustion test point
2 Incoming air for combustion test point

Warning
Ensure that both flue test point plugs are in place after checking combustion.

10.2 Maintenance message

Fig.66 Accessing the maintenance message

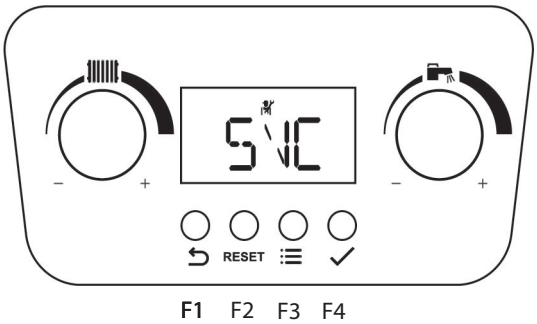

The purpose of this function is to warn the user that the boiler requires maintenance.
When the letters **SVC** appear on the screen and the symbol flashes, the boiler requires maintenance. Contact your installer.
The boiler is delivered with this function disabled. Proceed as follows to enable notifications on the display:

1. Go to the settings menu;
2. Enable setting **AP010**.
3. Apply the **AP011** setting by entering the number of hours the boiler has been in operation (from the moment the boiler was first supplied with electric power irrespective of the number of times the burner has been switched on and off).
4. Enter the number of burner start-up hours using the **AP009** parameter.

10.2.1 Service notification

When the boiler needs to be serviced, a request message appears on the display. Use the automatic assistance notification for preventative maintenance to reduce interruptions to a minimum.

Important
Maintenance must be carried out within two months of notification.

Important
If the modulating thermostat is connected to the boiler, this thermostat can also display the message SERVICE. Consult the thermostat manual.

Important
Reset SERVICE notification after maintenance is complete.

Fig.67 Resetting the displayed message

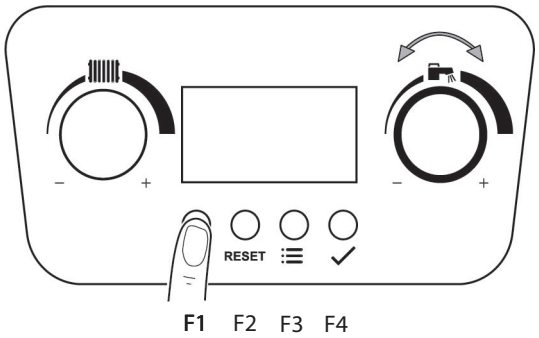

10.2.2 Resetting the displayed maintenance message

Reset the displayed maintenance message once the stated maintenance service has been carried out, as described below:

1. Press the **F1** key.
2. Turn the knob until the code **0012** is displayed.
3. Press the **F4** key to confirm and reset the maintenance message.

Important
The maintenance message is only active if parameter AP010 ≠ 0.

10.2.3 Resetting the upcoming maintenance message

Fig.68 Resetting the upcoming message

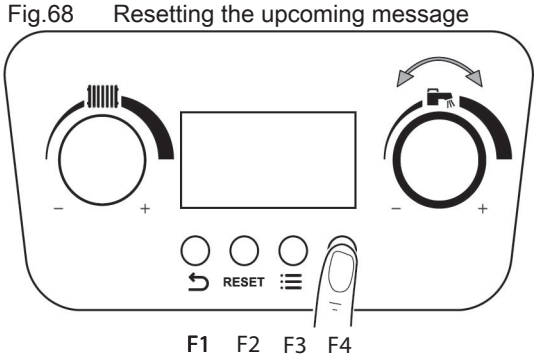

Reset an upcoming maintenance message once the intermediate maintenance service has been carried out.

1. Navigate to the Counter menu.
2. Press the **F4** key to open the menu.
3. Turn the knob until the code **SVC** is displayed.
4. Press the **F4** key to access the maintenance message.
5. Turn the knob until the code **0012** is displayed.
6. Press the **F4** key to confirm..
7. Turn the knob until the code **CLR** is displayed.
8. Press the **F4** key for around 3 seconds, to confirm and reset the maintenance message.
   ⇨ The display shows **DONE**. The maintenance message is reset.
9. Press the **F1** key several times to return to the main screen.

10.3 Standard inspection and maintenance operations

10.3.1 Annual Servicing

Warning
Ensure that the boiler is cool. Ensure that both the gas and electrical supplies to the boiler are isolated.

Caution
Always examine any seals or gaskets, replacing where necessary. Where a seal or gasket is supplied with a spare part it should be used, irrespective of the condition of the original. Use only original spare parts that are intended for use with this type of boiler.

Important
When performing any inspection or maintenance, personal protective equipment must be used where appropriate.

1. Ensure that both the gas and electrical supplies to the boiler are isolated and that the boiler is cool.
2. Remove the case front panel and hinge down the control panel.
3. Carefully examine all seals and gaskets, replacing if necessary. Look for any evidence of leaks or corrosion and if found determine and rectify the cause.
4. Complete the relevant Service Interval Record section of the Benchmark Commissioning Checklist at the rear of this publication and then hand it back to the user.

10.3.2 Checking the water pressure

In order for the boiler to operate correctly, the pressure of the water in the heating circuit, shown on the display, must be between **1.0** and **1.5** bar.

If necessary, restore the water pressure as described in the chapter entitled "Filling the installation".

10.3.3 Checking the expansion vessel

Check the expansion vessel and replace it if necessary. Check its pre-charge every year and restore the pressure to 1 bar if necessary.

10.3.4 Checking the flue gas discharge and the air supply

Check the entire line of flue gas pipes, in particular the tightness of the flue gas evacuation and combustion air intake connections.

10.3.5 Checking the combustion

Measure the O_2/CO_2 contents and the temperature of the flue gases at the flue gas measuring point. To do this, proceed as follows:

- Heat the water in the boiler to a temperature of approx. 70 °C. Unscrew the plug of the flue gas measurement point (exhaust system adaptor).
- Measure the content of O_2/CO_2 in the flue gas using the measuring equipment. Compare this with the control value.

10.3.6 Checking the automatic air vent

Check that the boiler pump venting valve is working. In the event of a leak replace the valve.

Fig.69 Dismantling the siphon

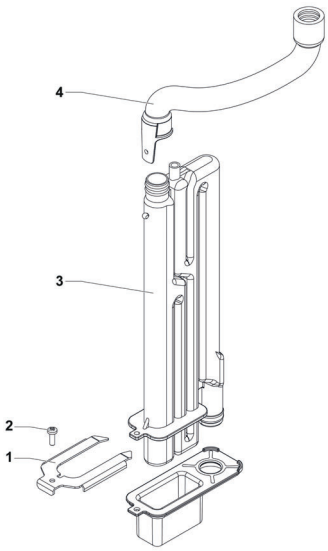

10.3.7 Cleaning the siphon

The front panel must be removed to extract the siphon (A). Proceed as described below:

- Remove the screw (2);
- Remove the clip (1);
- Unfasten the pipe from the heat exchanger (4);
- Remove the siphon (3) and clean it;
- Replace, if necessary, all the gaskets present;
- Fill the siphon with water.
- Assembly is the reverse of the above steps.

Fig.70 Electrode distance

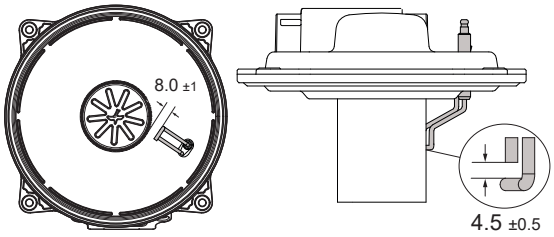

10.3.8 Electrode distances

Verify the distances between the electrode and the burner and between

Fig.71 Removing the air-gas system

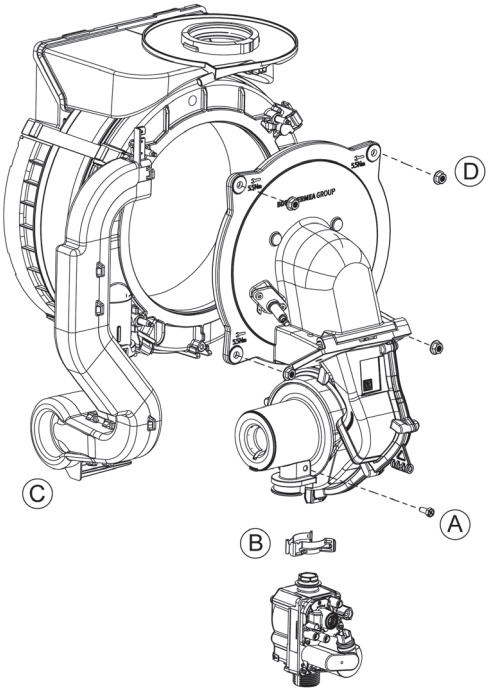

10.3.9 Checking the burner and cleaning the heat exchanger

Warning
Dust released from the front insulation panel and the rear insulation panel can harm your health.

- Clean the heat exchanger with only a soft brush and water.
- Avoid contact with the rear and front plate
- Do not use steel brushes or compressed air.

Danger
In the case of maintenance/disassembly of the boiler combustion circuit installed on a collective flue in positive pressure, take the necessary precautions to prevent the fumes from other boilers installed on the collective flue from entering the room where the boiler is installed.

Proceed as described below for cleaning:

1. Isolate the unit from the power supply (disconnect the boiler from the main power supply).
2. Cut off the gas supply to the boiler.
3. Close the hydraulic cocks.
4. Remove the front panel.
5. Remove the entire air-gas unit, unscrew the screw (A) and the clip (B) located between the fan and the gas valve.
6. Remove the silencer (C).
7. Unscrew the 4 M6 locknuts (D) on the burner door.
8. Check the condition of the detection/ignition electrode. Replace the electrode if necessary.
9. Check the condition of the burner, the gasket and the insulation panel.
10. The burner does not require any maintenance, it is self-cleaning.
11. Check that there are no cracks and/or other damage on the surface of the dismantled burner. If the burner is damaged, replace it.
12. Replace the burner flange gasket.
13. Check the front insulation panel for cracks, damage, moisture, ageing and deformation. Replace the insulation panel if in doubt.
14. To clean the upper part of the heat exchanger (combustion chamber), use a vacuum cleaner and a brush with plastic bristles.
15. Thoroughly clean with the vacuum cleaner again without the end piece (brush).
16. Make sure (using a mirror, for example) that there is no visible dust residue. Vacuum up any residue.
17. It is forbidden to clean the combustion chamber with any unauthorised chemical products and, in particular, ammonia, hydrochloric acid, sodium hydroxide (caustic soda) etc.
18. Generously wet the surfaces to be cleaned using a manual sprayer containing a solution of water and vinegar. Do not use it on excessively hot surfaces (max. 40 °C). Wait approx. 7-8 minutes then brush the surface without rinsing it. Repeat the process. Wait another 8 minutes and then brush again. If the result is not satisfactory, repeat the operation.
19. Rinse with water. The water will flow out of the heat exchanger through the condensate drain siphon. Wait another 20 minutes and use a powerful water jet to wash away the dirt particles. Do not aim the water jet directly at the insulating surface on the rear of the heat exchanger.
20. To re-assemble, perform the above actions in reverse order.

Caution
The maximum tightening torque of the four M6 nuts (D) fastening the flange is 5.5 Nm.

10.3.10 Water unit

Caution
Do not use tools to remove components from inside the water unit (e.g. filter).

For certain user areas, where domestic water hardness values exceed 20 °F (200 mg of calcium carbonate per litre of water) it is recommended to install a polyphosphate batcher or equivalent system complying with the prevailing standards.

10.3.11 Cleaning/replacing the DHW filter

Fig.72 Water unit parts

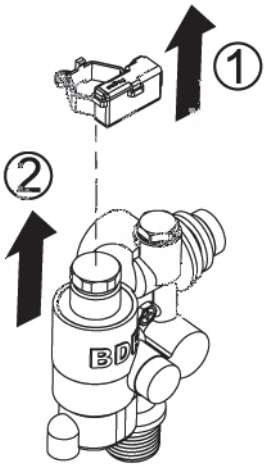

The domestic water filter is housed inside a suitable removable cartridge positioned on the cold water inlet. Proceed as follows to clean:

1. Disconnect the power supply to the boiler;
2. Close the domestic water inlet cock;
3. Empty the water from the domestic water circuit by opening a user cock;
4. Remove the hall sensor (1).
5. Unscrew the cartridge (2) containing the filter, taking care not to apply excessive force;
6. Remove any impurities and deposits from the filter;
7. Check the filter and replace if necessary:
8. Fit the filter back inside the cartridge and reinsert it into its seat;
9. Fit the hall sensor (1)

Notice
If the O-rings in the water unit need to be replaced and/or cleaned, do not use oil or grease as a lubricant, but only Molykote 111.

10.3.12 Removing limescale

The domestic water circuit can be cleaned after removing the water-water heat exchanger from its seat, by unscrewing the two front screws (A).

For the cleaning operations, you must:

- Disconnect the power supply to the boiler.
- Cut off the gas supply to the boiler.
- Close the heating system return and flow cocks.
- Empty the water contained in the heating circuit by opening the cock (E).
- Close the domestic water inlet cock.
- Empty the DHW circuit by opening the lowest hot water outlet.
- Remove the exchanger by unscrewing the two screws (A).
- Clean the plate heat exchanger with a descaling product (e.g. formic or citric acid with a pH value of around 3). After cleaning, rinse thoroughly under running water.
  To re-assemble, perform the above actions in reverse order.

Caution
The maximum tightening torque for the two fastening screws (A) for the plate heat exchanger is 4 Nm.

For more information, see
Treatment of water circulating systems, page 23

10.4 Specific maintenance operations

10.4.1 Detection/ignition electrode replacement

Fig.73 Remove detection/spark ignition electrode

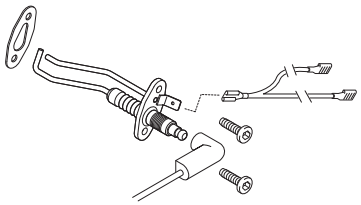

Replace the detection//ignition electrode in the following cases:

1. Ionisation current <4 µA. To do this, activate the "chimney sweep function" (chapter "Combustion settings") and set the boiler to the minimum power. The ionisation value is visible with setting GM008 (chapter "Reading out measured values").
2. Electrode worn.
3. Distances out of range (chapter “Electrode distance”).

To remove the electrode:

- Disconnect the power supply to the boiler.
- Cut off the gas supply to the boiler.
- Remove the front panel on the boiler (case) and remove the electrode pin and the earthing cable.
- Unscrew the 2 screws on the ignition electrode and remove it.
- Fit the new electrode with the gasket. To re-assemble, perform the above actions in reverse order.

10.4.2 Dismantling the water-water exchanger

The stainless steel plate water-water heat exchanger can be easily removed, as described below:

1. Disconnect the power supply to the boiler;
2. Close the gas cock;
3. Close the heating system return and flow cocks.
4. Drain the system, if possible only the boiler, using the specific drain cock (E);
5. Empty the water contained in the domestic water circuit by opening a user cock;
6. Remove the silencer, then loosen the two Allen screws Ø 6 mm (A) securing the heat exchanger and remove it from its seat;
7. Use a natural product (e.g. vinegar) to clean the water-water heat exchanger;
8. To re-assemble, perform the above actions in reverse order.

Fig.74 Remove flow and return sensors

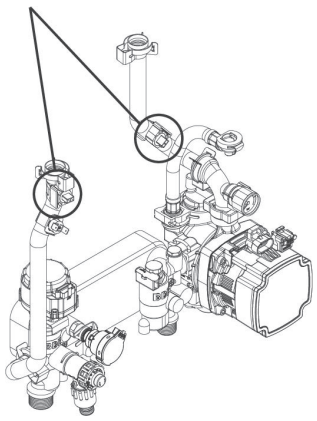

10.4.3 Flow and return sensors

There is one sensor on the flow (red wires) and one sensor on the return (blue wires).

1. After noting the position of each sensor, prise the sensor clip off the pipe and disconnect the plug.
2. Connect the plug to the new sensor and ease the clip onto the pipe in its original position.

Fig.75 Remove flow regulator and filter

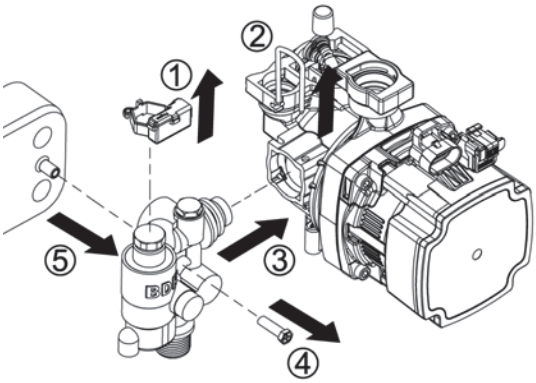

10.4.4 Replacing the return valve

To replace the return valve, proceed as follows:

1. Disconnect the power supply to the boiler;
2. Close the gas cock;
3. Cut off the gas supply to the boiler.
4. Close the heating system return and flow cocks.
5. Drain the system, if possible only the boiler, using the specific drain cock.
6. Empty the water from the domestic water circuit by opening a user cock.
7. Disconnect any piping connections.
8. Remove the hall effect sensor (1).
9. Remove the clip (2).
10. Disconnect the pump (3).
11. Remove the fastener (4).
12. Remove the valve from the heat exchanger (5).
13. To re-assemble, perform the above actions in reverse order.

Fig.76 Remove pump

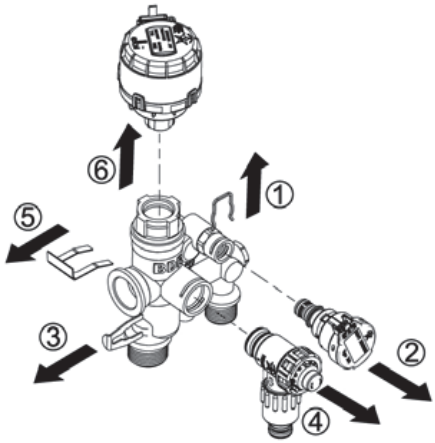

10.4.5 Replacing the 3-way valve

To replace the diverter valve, proceed as follows:

1. Disconnect the power supply to the boiler;
2. Close the gas cock;
3. Cut off the gas supply to the boiler.
4. Close the heating system return and flow cocks.
5. Drain the system, if possible only the boiler, using the specific drain cock.
6. Empty the water from the domestic water circuit by opening a user cock.
7. Disconnect any piping connections.
8. Remove the clip (1).
9. Remove the pressure sensor (2).
10. Remove the fixing spring (3).
11. Remove the safety valve (4).
12. Remove the motor fixing spring (5).
13. Remove the motor (6).
14. To re-assemble, perform the above actions in reverse order.

Fig.77 Remove pressure sensor

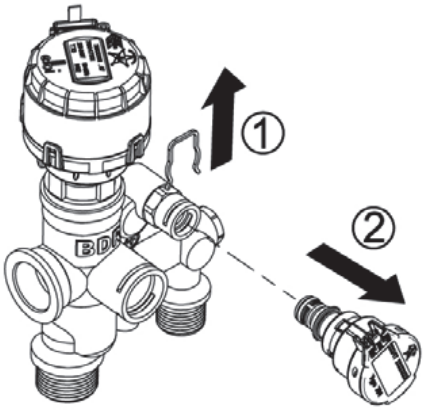

10.4.6 Pressure Sensor

1. Drain the primary circuit and undo the nut on the pressure gauge capillary.
2. Ease the two retaining tabs holding the pressure gauge bracket away and remove the bracket.
3. Remove the gauge assembly.
4. Examine the sealing washer on the pressure gauge capillary, replace if necessary.
5. Reassemble in reverse order with the new pressure gauge.

Fig.78 Remove hall effect sensor

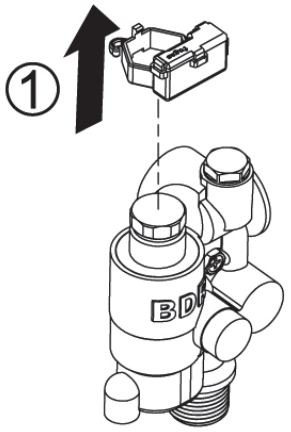

10.4.7 Hall effect sensor

1. Ease the sensor upwards off the hydraulic inlet manifold assembly.
2. Disconnect the electrical plug from the sensor.
3. Connect the plug to the new sensor. Carefully fit the new sensor to the hydraulic assembly, ensuring it is fully down.

Fig.79 Remove safety pressure relief valve

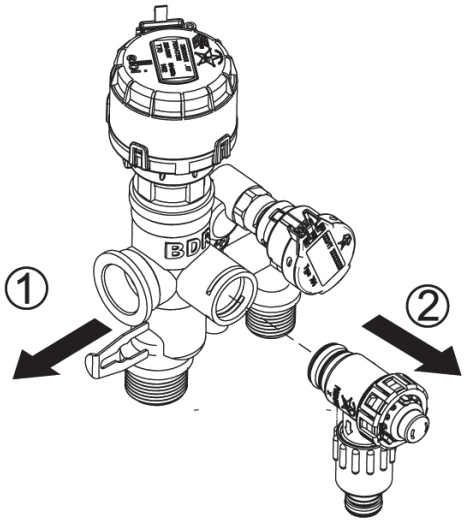

10.4.8 Safety pressure relief valve

1. Drain the primary circuit.
2. Disconnect the discharge pipe from the valve and remove the sealing grommet.
3. Using a suitable hexagon key undo the grub screw sufficiently to release the valve.
4. Note the orientation of the valve, rotate it and withdraw it from the manifold.
5. Fit the new valve and ‘O’ ring seal and set to the previously noted orientation. Tighten the grub screw.
6. Reconnect the discharge pipe ensuring the sealing grommet is in place to maintain the integrity of the case seal.

Fig.80 Remove diverter valve

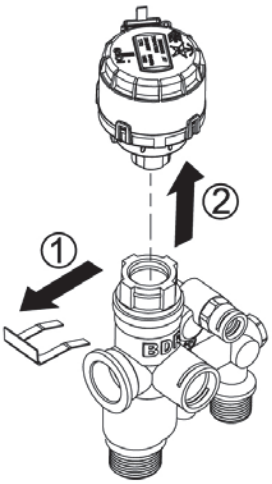

10.4.9 Diverter valve motor

1. Disconnect the multi-pin plug from the diverter valve motor.
2. Hold the motor in place against the spring pressure of the valve assembly, remove the securing clip (1).
3. Remove the motor (2).
4. When fitting the new motor it will be necessary to hold the unit firmly while depressing the valve assembly spring to refit the securing clip.
5. Reconnect the multi-pin plug.

Fig.81 Remove pump

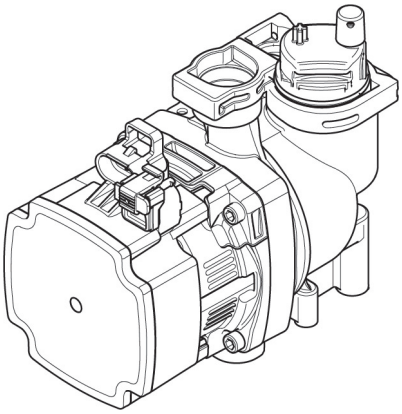

10.4.10 Pump - replacement

Warning
Take precautions to protect other components from water damage when removing the pump and auto air vent.

1. Hinge the control box down.
2. Close the flow and return isolation taps and drain the boiler primary circuit.
3. Disconnect the electrical plugs from the pump motor.
4. Prise off the securing clip that is holding the pump return pipe in position. Pull away the pipe.
5. Pull out the securing clip that is holding the pump body to the hydraulic inlet assembly.
6. Prise off the securing clip and disconnect the braided hose from the pump body, taking care as water may still be in the hose.
7. Remove the screws securing the pump to the boiler bottom panel.
8. The pump should now be able to be remove.
9. Pull out the securing clip and remove the automatic air vent, transfering it to the new pump body.
10. Examine all ‘O’ ring seals, replace if necessary and reassemble in reverse order.

10.4.11 Replacing the expansion vessel

Before replacing the expansion vessel, proceed as detailed below:

1. Disconnect the power supply to the boiler.
2. Close the gas cock.
3. Close the main domestic water tap.
4. Close the heating system return and flow cocks.
5. Open the boiler drain cock.

The expansion vessel is inside the boiler on the side, to the right.

10.4.12 Replacing the PCB

After replacing the main board, power up the boiler electrically.
Parameters **CN1** and **CN2** will automatically appear on the display.

Modify the parameters with the data shown on the serial number plate:

- Turn knob to modify the parameters;
- Press the **F4** key to store the set value.

Fig.82 Modifying the parameters

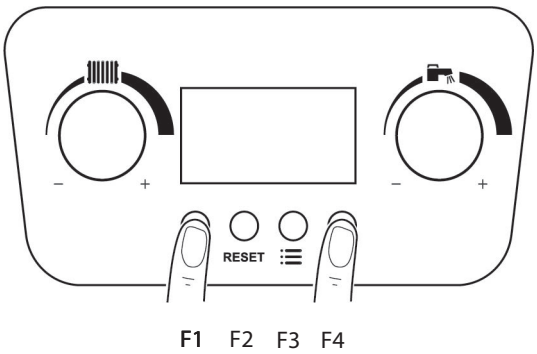

Parameters **CN1** and **CN2** can also be accessed from the main menu to carry out the replacement. Press the two external buttons on the control panel simultaneously for about 40 seconds.

Caution
Please note that resetting the **CN1** and **CN2** settings with data on the data plate deletes any previous setting. If changing the gas, for example, remember to set the correct calibration for the gas valve.

10.4.13 Setting an uncalibrated gas valve

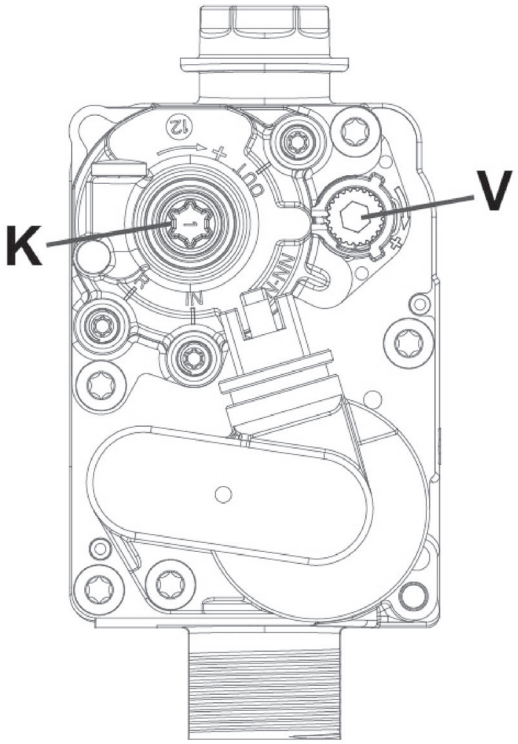

> **IMPORTANT**
> Always remove the Allen key from the adjustment screw while combustion values stabilise.

This procedure must be followed when an out of adjustment gas valve is being calibrated, e.g. after fitting a new valve.

The gas flow adjustment screw (**V**) requires a 4 mm Allen key. A T40 'Torx' screwdriver is required for the offset screw (**K**) cap & adjustment screw.

1. With the boiler off turn the gas flow adjustment screw (**V**) fully **clockwise** until it is flush with the plastic tube. It is a left-hand thread!

2. To set the combustion correctly turn the gas flow adjustment screw (**V**) **anticlockwise** by the number of turns as shown in the table.

3. Ensure there is a demand to turn the boiler on. If the boiler ignites go to point 7. In instances where the boiler does not remain on proceed as described in 4, 5 & 6.

4. Remove the protective screw cap from the offset screw (**K**).

5. Rotate the offset adjustment screw (**K**) clockwise a 1/2 turn.

6. Attempt to turn the boiler on again. If it still does not remain on repeat point 5.

7. **CAUTION** The number of turns of the gas flow adjustment screw (**V**) and offset adjustment screw (**K**) are only indicative. Follow point 8 and check the combustion at maximum and minimum inputs.

8. Measure the CO2/O2 at the flue sampling point and check against the values in the table in 7.4.4 'Service settings'. If necessary adjust as described in 7.4.5 'Adjusting the gas valve'.

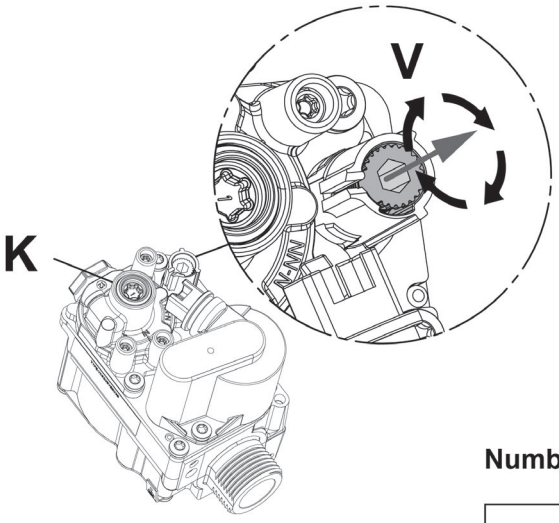

Number of turns - gas flow adjustment screw V

Model	Gas Type	
	Natural Gas (G20)	LPG (G31)
Combi 24	6.5	8
Combi 30	6	7
Combi 36	5	6

11 Troubleshooting

11.1 Temporary and permanent faults

The codes on the display indicate two types of fault: temporary and permanent. The first item shown on the display is a letter followed by a two-digit number. The letter indicates the type of fault: temporary (**H**) or permanent (**E**). The number indicates the group in which the fault that has occurred is classified according to its impact on safe and reliable operation. The second item shown flashes alternately with the first and consists of a two-digit number that indicates the type of fault which has occurred (see the following fault tables).

TEMPORARY FAULT (A/H.x.x.)

A temporary fault is shown on the display by the letter “A” or “H” followed by a number (group). A temporary fault is a type of fault that does not cause a permanent stoppage of the boiler. It has the following characteristics:

A: The appliance continues to operate. It disappears as soon as the cause has been resolved.

H: Disappears when the error condition is removed, in some cases even after 10 minutes.

PERMANENT FAULT (E.x.x)

A permanent fault is shown on the display by the letter "E" followed by a number (group). Press the RESET button for one second. If faults are shown frequently, contact our authorised technical assistance centre.

E: Stoppage, reset required..

11.2 Error codes

Tab.33 List of temporary (volatile) faults

Boiler display		Description	Cause - Check/Solution An installer is required for most checks and solutions
Group code	Specific code		
A.00	.28	Solar temperature sensor is either removed or measures a temperature below range	Check the solar temperature sensor wiring. Replace the sensor if necessary. In case of removal of the solar tank, set the parameter DP150=1.
A.00	.29	Solar temperature sensor is either shorted or measures a temperature above range	Check the solar temperature sensor wiring. Replace the sensor if necessary.
A.00	.34	Outdoor temperature sensor expected but not detected	OUTDOOR SENSOR NOT DETECTED Enter the correct value of the parameter AP091 (AP091=0) Connect the outdoor sensor Outdoor sensor is not connected correctly
A.02	.06	Low system pressure in heating circuit	Check the installation pressure and restore Check the expansion vessel pressure Check for boiler/installation leaks
A.02	.18	OBD error	CONFIGURATION ERROR Re-enter the CN1 and CN2 values, check the information shown on the data plate
A.02	.36	Functional device disconnected	COMMUNICATION FAULT Start the auto-detect function (parameter AD) Check the devices connected to contact X9
A.02	.37	Passive functional device disconnected	COMMUNICATION FAULT Start the auto-detect function (parameter AD) Check the devices connected to contact X9
A.02	.45	Connection error	COMMUNICATION FAULT Start the auto-detect function (parameter AD))
A.02	.46	Device priority error	COMMUNICATION FAULT Start the auto-detect function (parameter AD)
A.02	.48	Unit function configuration error	ELECTRICAL CONNECTION ERROR Start the auto-detect function (parameter AD)) Check electrical connections of external devices
A.02	.49	Failed node initialisation	ELECTRICAL CONNECTION ERROR Start the auto-detect function (parameter AD)) Check electrical connections of external devices

Boiler display		Description	Cause - Check/Solution An installer is required for most checks and solutions
Group code	Specific code		
A.02	.54	Open Therm bus power supply error	Check the devices connected to contact X17 - Terminal board M2 (7-8) Replace the main PCB (CU-GH)
A.02	.55	Incorrect or missing serial number	Replace the main PCB (CU-GH)
A.02	.76	Internal memory reserved for full customisation of settings. No further changes can be made	CONFIGURATION ERROR Re-enter the values CN1 and CN2 Replace the CU-GH board
H.00	.42	Pressure sensor open/faulty	SENSOR/CONNECTION PROBLEM Check the operation of the pressure sensor Check the sensor/PCB connection
H.00	.81	Room unit disconnected	Check the operation of the room unit. Check the room unit/PCB connection. When removing the room unit, switch the power supply off and on again and set parameter CP780 =0 to remove the error.
H.01	.00	Temporary communication failure between gas valve and boiler PCB.	MAIN PCB ERROR Configure CN1/CN2 Replace the main PCB
H.01	.05	Maximum temperature difference value between flow and return reached.	INSUFFICIENT CIRCULATION Check the boiler/installation circulation Activate a manual venting cycle Check the installation pressure OTHER CAUSES Check the cleanliness of the exchanger Check the operation of the temperature sensors Check the connection of the temperature sensors
H.01	.08	Flow temperature increase in heating mode too quick. Temporary stoppage of 10 minutes.	INSUFFICIENT CIRCULATION Check the boiler/installation circulation Activate a manual venting cycle Check the installation pressure OTHER CAUSES Check the cleanliness of the exchanger Check the operation of the temperature sensors Check the temperature sensor connection
H.01	.14	Maximum flow or return temperature value reached.	INSUFFICIENT CIRCULATION Check the boiler/installation circulation Activate a manual venting cycle
H.01	.18	No water circulation (temporary).	INSUFFICIENT CIRCULATION Check the installation pressure Activate a manual venting cycle Check the operation of the pump Check the boiler/installation circulation TEMPERATURE SENSOR ERROR Check the operation of the temperature sensors Check the temperature sensor connection
H.01	.21	Flow temperature increase during domestic hot water operation too fast.	iNSUFFICIENT CIRCULATION Check the installation pressure Activate a manual venting cycle Check the operation of the pump Check the boiler/installation circulation TEMPERATURE SENSOR ERROR Check the operation of the temperature sensors Check the temperature sensor connection
H.02	.00	Reset in progress	
H.02	.02	Waiting for configuration settings to be entered (CN1,CN2).	CN1/CN2 CONFIGURATION MISSING Configure CN1/CN2
H.02	.03	Configuration settings (CN1,CN2) not entered correctly.	Check configuration CN1/CN2 Configure CN1/CN2 correctly
H.02	.04	PCB settings cannot be read.	MAIN PCB ERROR Configure CN1/CN2 Replace the main PCB
H.02	.05	Setting memory not compatible with the boiler PCB type	Reset CN codes. Replace main PCB
H.02	.07	Low pressure in heating circuit (permanently)	Check the system pressure and restore it Check the pressure of the expansion vessel Check for any system / boiler leaks

Boiler display		Description	Cause - Check/Solution An installer is required for most checks and solutions
Group code	Specific code		
H.02	.09	Partial stoppage of the boiler (antifreeze function active)	SIGNAL INDICATING BLOCKING INPUT Contact X15 open, check connected devices Parameter configuration error: Check AP001
H.02	.10	Total stoppage of the boiler (antifreeze function not active)	SIGNAL INDICATING BLOCKING INPUT Contact X15 open, check connected devices Parameter configuration error: Check AP001
H.02	.70	External unit heat recovery test failed	PCB accessory error SCB-09 Check the device connected to contact X9
H.03	.00	No identification data for boiler safety device.	MAIN PCB ERROR Replace the main PCB
H.03	.02	Temporary flame loss	ELECTRODE PROBLEM Check the electrode connection and wiring Check the condition of the electrode GAS SUPPLY Check the gas supply pressure Check the gas valve calibration FLUE GAS PIPES Check the pipes and the termina
H.03	.05	Power supply voltage too low	Check the mains voltage
H.03	.54	Temporary flame loss Shutdown due to the power supply voltage being too low	ELECTRODE PROBLEM Check the electrode electrical connections Check the condition of the electrode GAS SUPPLY Check the gas inlet pressure Check the gas valve calibration FLUE GAS EXHAUST PIPE Check the air intake and flue gas exhaust termi nal Check the power supply voltage

Tab. 34 List of permanent faults (boiler stoppage, reset required)

Boiler display		Description	Cause - Check/Solution An installer is required for most checks and solutions
Group code	Specific code		
E.00	.04	Return temperature sensor disconnected	SENSOR/CONNECTION PROBLEM Check the operation of the temperature sensor Check the sensor/PCB connection
E.00	.05	Return temperature sensor short circuited	SENSOR/CONNECTION PROBLEM Check the operation of the sensor Check the sensor/PCB connection
E.00	.16	DHW tank temperature sensor not connected	SENSOR OPEN Check the operation of the sensor Check the sensor/PCB connection When removing a domestic hot water tank, set parameter DP150=1
E.00	.17	DHW tank temperature sensor short-circuited	SENSOR CLOSED Check the operation of the sensor Check the sensor/PCB connection
E.00	.20	The flue gas temperature sensor is not connected or measured a temperature below the range	SENSOR OPEN Check the operation of the sensor Check the sensor/PCB connection
E.00	.21	The flue gas temperature sensor has short-circuited or measured a temperature above the range	SENSOR CLOSED Check the operation of the sensor Check the sensor/PCB connection
E.01	.04	Flame loss detected five times in 24 hours	GAS SUPPLY Check the gas supply pressure Check the gas valve calibration ELECTRODE PROBLEM Check the electrode connection and wiring Check the condition of the electrode FLUE GAS PIPES Check the air intake and flue gas exhaust pipes EXCHANGER ON FLUE GAS SIDE BLOCKED Check the cleanliness of the exchanger MAINS VOLTAGE Check the power supply voltage

Boiler display		Description	Cause - Check/Solution An installer is required for most checks and solutions
Group code	Specific code		
E.01	.12	Temperature measured by return sensor greater than flow temperature	SENSOR/CONNECTION PROBLEM Check that the sensors are positioned the correct way around Check that the flow sensor is in the correct position Check the return temperature in the boiler Check the operation of the sensors
E.01	.17	No water circulation (permanent)	INSUFFICIENT CIRCULATION Check the installation pressure Activate a manual venting cycle Check the operation of the pump Check the boiler/installation circulation SENSOR ERROR Check the operation of the temperature sensors Check the temperature sensor connection
E.01	.20	Maximum flue gas temperature reached	EXCHANGER ON FLUE GAS SIDE BLOCKED Check the cleanliness of the exchanger
E.02	.13	Total stoppage of the boiler (antifreeze function not active)	SIGNAL INDICATING BLOCKING INPUT Contact X15 open, check connected devices Parameter configuration error: Check setting AP001
E.02	.17	Permanent communication failure between gas valve and boiler PCB	MAIN PCB ERROR Check for any electromagnetic interference Replace the main PCB
E.02	.35	Critical safety device disconnected	COMMUNICATION FAULT Start the auto-detect function (parameter AD) Check the devices connected to contact X9
E.02	.39	Minimum pressure not reached after 6 minutes of automatic filling	Check automatic filling is working (if fitted)
E.02	.47	Connection to external device unsuccessful	ELECTRICAL CONNECTION ERROR Start the auto-detect function (parameter AD) Check the electrical connections of external devices.
E.04	.01	Flow temperature sensor short circuited	SENSOR/CONNECTION PROBLEM Check the sensor/PCB connection Check the operation of the sensor
E.04	.02	Flow temperature sensor disconnected	SENSOR/CONNECTION PROBLEM Check the sensor/PCB connection Check the operation of the sensor
E.04	.03	Maximum flow temperature exceeded or flow temperature sensor short circuited	INSUFFICIENT CIRCULATION Check the boiler/installation circulation Activate a manual venting cycle Check the operation of the sensors
E.04	.08	Maximum safe temperature value reached	INSUFFICIENT CIRCULATION Check the pressure in the installation Switch on the manual de-aeration function Check that the pump is working Check the circulation in the boiler/installation OTHER POSSIBLE CAUSES Check the safety thermostat connection Check that the safety thermostat is working correctly
E.04	.10	Burner failed to ignite after 4 attempts	GAS SUPPLY Check the gas supply pressure Check the gas valve electrical connection Check the gas valve calibration Check the operation of the gas valve ELECTRODE PROBLEM Check the electrode electrical connections Check the electrode condition OTHER CAUSES Check the operation of the fan Check the condition of the flue gas exhaust (blockages)
E.04	.12	Ignition failure -flame monitoring	Check the earth circuit Check the power supply voltage Check the electrode conditions
E.04	.13	Fan impeller blocked or maximum rpm exceeded	FAN/PCB PROBLEM Check the PCB-fan connection Check the fan operation
E.04	.17	Fault in gas valve control circuit	MAIN PCB ERROR Check the electrical connections for the gas valve Replace the main PCB

Boiler display		Description	Cause - Check/Solution An installer is required for most checks and solutions
Group code	Specific code		
E.04	.18	The flow temperature is below the minimum temperature or the flow temperature sensor is not connected	SENSOR/CONNECTION PROBLEM Check the sensor/PCB connection Check the operation of the sensor
E.04	.23	Communication internal stoppage	Switch the power supply off and on again and then RESET
E.04	.254	Fault in gas valve control circuit	MAIN PCB ERROR Check the electrical connections
E.04	.29	Communication internal stoppage	Switch the power supply off and on again and then RESET
E.04	.54	Fault in gas valve control circuit	Check the wiring on the gas valve Replace the gas valve or PCB

Important
When connecting a Room Unit/Control Unit to the boiler, the code "**254**" is always shown in the event of a fault.. Read the fault code shown on the boiler display.

12 Decommissioning

12.1 Disassembly

Warning
Only qualified professionals are authorised to work on the boiler and the heating system.

Proceed as follows to disassemble the boiler:

1. Switch off the boiler.
2. Disconnect the power supply to the boiler.
3. Close the gas valve to the boiler.
4. Close the inlet cock for domestic cold water in the boiler.
5. Tap domestic water by opening a cock to relieve pressure from the domestic water circuit.
6. Drain the heating installation.

Warning
If the boiler was in operation, wait for the water contained in the heating installation to cool down.

7. Remove the pipe connecting the boiler to the chimney and close the connection with a plug.
8. Unscrew the hydraulic and gas connections in the lower part of the boiler.

Warning
Moving the boiler is a job for two people.

12.2 Recommissioning

Warning
Only qualified professionals are authorised to work on the boiler and the heating system.

Should you need to recommission the boiler, follow the instructions for disassembly in the reverse order.

13 Disposal

13.1 Disposal and recycling

The appliance is composed of multiple components made from various different materials, such as steel, copper, plastic, fibreglass, aluminium, rubber, etc..

These materials may be highly pollutant. This means that the boiler must be disposed of correctly by contacting staff at the nominated disposal facility or by taking it to a centre that is authorised to dispose of bulky waste (domestic appliances).

Fig.83 Recycling

Fig.84 Cutting the power supply

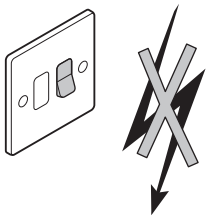

Warning
Removal and disposal of the boiler must be carried out by a qualified installer in accordance with local and national regulations.

Benchmark Commissioning & Warranty Validation Service Record

It is a requirement that the boiler is installed and commissioned to the manufacturers' instructions and the data fields on the commissioning checklist completed in full.

To instigate the boiler warranty the boiler needs to be registered with the manufacturer within one month of the installation. The warranty rests with the end-user (consumer), and they should be made aware it is ultimately their responsibility to register with the manufacturer, within the allotted time period.

It is essential that the boiler is serviced in line with the manufacturers' recommendations, at least annually. This must be carried out by a competent Gas Safe registered engineer. The service details should be recorded on the Benchmark Service and Interim Boiler Work Record and left with the householder. Failure to comply with the manufacturers' servicing instructions and requirements will invalidate the warranty.

benchmark
COLLECTIVE MARK
THE MARK OF QUALITY FOR THE INSTALLATION, COMMISSIONING AND SERVICING OF DOMESTIC HEATING AND HOT WATER SYSTEMS

www.hhic.co.uk

This Commissioning Checklist is to be completed in full by the competent person who commissioned the boiler as a means of demonstrating compliance with the appropriate Building Regulations and then handed to the customer to keep for future reference.

Failure to install and commission according to the manufacturers' instructions and complete this Benchmark Commissioning Checklist will invalidate the warranty. This does not affect the customer's statutory rights.

* All installations in England and Wales must be notified to Local Authority Building Control (LABC) either directly or through a Competent Persons Scheme. A Building Regulations Compliance Certificate will then be issued to the customer.

© Heating and Hotwater Industry Council (HHIC)

benchmark
COLLECTIVE MARK
THE MARK OF QUALITY FOR THE INSTALLATION, COMMISSIONING AND SERVICING OF DOMESTIC HEATING AND HOT WATER SYSTEMS

GAS BOILER SYSTEM COMMISSIONING CHECKLIST & WARRANTY VALIDATION RECORD

Address:						
Boiler make and model:						
Boiler serial number:						
Commissioned by (PRINT NAME):			Gas Safe registration number:			
Company name:			Telephone number:			
Company email:			Company address:			
					Commissioning date:	
Heating and hot water system complies with the appropriate Building Regulations?					Yes	
Optional: Building Regulations Notification Number (if applicable):						
Time, temperature control and boiler interlock provided for central heating and hot water					Yes	
Boiler Plus requirements (tick the appropriate box(s))						
Boiler Plus option chosen for combination boiler in ENGLAND			Weather compensation		Smart thermostat with automisation and optimisation	
			Load compensation		Flue Gas Heat Recovery	
Time and temperature control to hot water		Cylinder thermostat and programmer/timer			Combination boiler	
Zone valves	pre-existing		Fitted		Not required	
Thermostatic radiator valves	pre-existing		Fitted		Not required	
Automatic bypass to system	pre-existing		Fitted		Not required	
Underfloor heating	pre-existing		Fitted		Not required	
Water quality						
The system has been flushed, cleaned and a suitable inhibitor applied upon final fill, in accordance with BS7593 and boiler manufacturers' instructions					Yes	
What system cleaner was used?			Brand:		Product:	
What inhibitor was used?			Brand:		Product:	
Primary water system filter	pre-existing		Fitted		Not required	
CENTRAL HEATING MODE measure and record (as appropriate)						
Gas rate (for combination boilers complete DHW mode gas rate)			m^3/hr	or	ft^3/hr	
Central heating output left at factory settings?			Yes		No	
If no, what is the maximum central heating output selected?					kW	
Dynamic gas inlet pressure					mbar	
Central heating flow temperature					°C	
Central heating return temperature					°C	
System correctly balanced/rebalanced?					Yes	
COMBINATION BOILERS ONLY						
Is the installation in a hard water area (above 200ppm)?			Yes		No	
Water scale reducer/softener	pre-existing		Fitted		Not required	
What type of scale reducer/softener has been fitted?			Brand:		Product:	
Water meter fitted?			Yes		No	
If yes- DHW expansion vessel	pre-existing		Fitted		Not required	
Pressure reducing valve	pre-existing		Fitted		Not required	
DOMESTIC HOT WATER MODE Measure and record						
Gas rate			m^3/hr	or	ft^3/hr	
Dynamic gas inlet pressure at maximum rate					mbar	
Cold water inlet temperature					°C	
Hot water has been checked at all outlets			Yes		Temperature	°C
CONDENSATE DISPOSAL						
The condensate drain has been installed in accordance with the manufacturers' instructions and/or BS5546/BS6798					Yes	
Point of termination			Internal		External (only where internal termination impractical)	
Method of disposal			Gravity		Pumped	
ALL INSTALLATIONS						
Record the following	At max rate:	CO ppm	CO_2 %		CO/CO_2 Ratio	
	At min rate (where possible)	CO ppm	CO_2 %		CO/CO_2 Ratio	
Where possible, has a flue integrity check been undertaken in accordance with manufacturers' instructions, and readings are correct?					Yes	
The operation of the boiler and system controls have been demonstrated to and understood by the customer					Yes	
The manufacturers' literature, including Benchmark Checklist and Service Record, has been explained and left with the customer					Yes	
Commissioning Engineer's signature						
Customer's signature (To confirm satisfactory demonstration and receipt of manufacturers' literature)						

* All installations in England and Wales must be notified to Local Authority Building Control (LABC) either directly or through a Competent Persons Scheme. A Building Regulations Compliance Certificate will then be issued to the customer.

© Heating and Hotwater Industry Council (HHIC)

benchmark COLLECTIVE MARK
THE MARK OF QUALITY FOR THE INSTALLATION, COMMISSIONING AND SERVICING OF DOMESTIC HEATING AND HOT WATER SYSTEMS

www.centralheating.co.uk

SERVICE & INTERIM BOILER WORK RECORD

It is recommended that your boiler and heating system are regularly serviced and maintained, in line with manufacturers' instructions, and that the appropriate service / interim work record is completed.

Service provider

When completing a service record (as below), please ensure you have carried out the service as described in the manufacturers' instructions. Always use the manufacturers' specified spare parts.

SERVICE/INTERIM WORK ON BOILER delete as appropriate			Date:	
Engineer name:		Company name:		
Telephone Nº:		Gas Safe registration Nº:		
Max rate	CO ppm	CO_2 %	CO/CO_2	
Min rate	CO ppm	CO_2 %	CO/CO_2	
Where possible, has a flue integrity check been undertaken in accordance with manufacturers' instructions, and readings are correct?"			yes	
Gas rate:	m^3/h	OR	ft^3/h	
Were parts fitted?delete as appropriate		Yes	No	
Parts fitted:				
System inhibitor concentration has been checked and appropriate action taken, in accordance with BS 7593 and boiler manufacturers' instructions. *			yes	n/a
Comments:				
Signature:				

*A System inhibitor efficacy test is required on every annual service in accordance with the manufacturers' instructions and BS 7593. It is only acceptable to not have undertaken this if the service engineers attendance visit was in between annual services to attend a non-water facing component.

SERVICE/INTERIM WORK ON BOILER delete as appropriate			Date:	
Engineer name:		Company name:		
Telephone Nº:		Gas Safe registration Nº:		
Max rate	CO ppm	CO_2 %	CO/CO_2	
Min rate	CO ppm	CO_2 %	CO/CO_2	
Where possible, has a flue integrity check been undertaken in accordance with manufacturers' instructions, and readings are correct?"			yes	
Gas rate:	m^3/h	OR	ft^3/h	
Were parts fitted?delete as appropriate		Yes	No	
Parts fitted:				
System inhibitor concentration has been checked and appropriate action taken, in accordance with BS 7593 and boiler manufacturers' instructions. *			yes	n/a
Comments:				
Signature:				

*A System inhibitor efficacy test is required on every annual service in accordance with the manufacturers' instructions and BS 7593. It is only acceptable to not have undertaken this if the service engineers attendance visit was in between annual services to attend a non-water facing component.

SERVICE/INTERIM WORK ON BOILER delete as appropriate			Date:	
Engineer name:		Company name:		
Telephone Nº:		Gas Safe registration Nº:		
Max rate	CO ppm	CO_2 %	CO/CO_2	
Min rate	CO ppm	CO_2 %	CO/CO_2	
Where possible, has a flue integrity check been undertaken in accordance with manufacturers' instructions, and readings are correct?"			yes	
Gas rate:	m^3/h	OR	ft^3/h	
Were parts fitted?delete as appropriate		Yes	No	
Parts fitted:				
System inhibitor concentration has been checked and appropriate action taken, in accordance with BS 7593 and boiler manufacturers' instructions. *			yes	n/a
Comments:				
Signature:				

*A System inhibitor efficacy test is required on every annual service in accordance with the manufacturers' instructions and BS 7593. It is only acceptable to not have undertaken this if the service engineers attendance visit was in between annual services to attend a non-water facing component.

SERVICE/INTERIM WORK ON BOILER delete as appropriate			Date:	
Engineer name:		Company name:		
Telephone Nº:		Gas Safe registration Nº:		
Max rate	CO ppm	CO_2 %	CO/CO_2	
Min rate	CO ppm	CO_2 %	CO/CO_2	
Where possible, has a flue integrity check been undertaken in accordance with manufacturers' instructions, and readings are correct?"			yes	
Gas rate:	m^3/h	OR	ft^3/h	
Were parts fitted?delete as appropriate		Yes	No	
Parts fitted:				
System inhibitor concentration has been checked and appropriate action taken, in accordance with BS 7593 and boiler manufacturers' instructions. *			yes	n/a
Comments:				
Signature:				

*A System inhibitor efficacy test is required on every annual service in accordance with the manufacturers' instructions and BS 7593. It is only acceptable to not have undertaken this if the service engineers attendance visit was in between annual services to attend a non-water facing component.

SERVICE/INTERIM WORK ON BOILER delete as appropriate			Date:	
Engineer name:		Company name:		
Telephone Nº:		Gas Safe registration Nº:		
Max rate	CO ppm	CO_2 %	CO/CO_2	
Min rate	CO ppm	CO_2 %	CO/CO_2	
Where possible, has a flue integrity check been undertaken in accordance with manufacturers' instructions, and readings are correct?"			yes	
Gas rate:	m^3/h	OR	ft^3/h	
Were parts fitted?delete as appropriate		Yes	No	
Parts fitted:				
System inhibitor concentration has been checked and appropriate action taken, in accordance with BS 7593 and boiler manufacturers' instructions. *			yes	n/a
Comments:				
Signature:				

*A System inhibitor efficacy test is required on every annual service in accordance with the manufacturers' instructions and BS 7593. It is only acceptable to not have undertaken this if the service engineers attendance visit was in between annual services to attend a non-water facing component.

* All installations in England and Wales must be notified to Local Authority Building Control (LABC) either directly or through a Competent Persons Scheme. A Building Regulations Compliance Certificate will then be issued to the customer.

© Heating and Hotwater Industry Council (HHIC)

benchmark COLLECTIVE MARK
THE MARK OF QUALITY FOR THE INSTALLATION, COMMISSIONING AND SERVICING OF DOMESTIC HEATING AND HOT WATER SYSTEMS

www.centralheating.co.uk

SERVICE & INTERIM BOILER WORK RECORD

It is recommended that your boiler and heating system are regularly serviced and maintained, in line with manufacturers' instructions, and that the appropriate service / interim work record is completed.

Service provider

When completing a service record (as below), please ensure you have carried out the service as described in the manufacturers' instructions. Always use the manufacturers specified spare parts.

SERVICE/INTERIM WORK ON BOILER delete as appropriate			Date:	
Engineer name:		Company name:		
Telephone Nº:		Gas Safe registration Nº:		
Max rate	CO ppm	CO_2 %	CO/CO_2	
Min rate	CO ppm	CO_2 %	CO/CO_2	
Where possible, has a flue integrity check been undertaken in accordance with manufacturers' instructions, and readings are correct?"			yes	
Gas rate:	m^3/h	OR	ft^3/h	
Were parts fitted?delete as appropriate		Yes	No	
Parts fitted:				
System inhibitor concentration has been checked and appropriate action taken, in accordance with BS 7593 and boiler manufacturers' instructions. *			yes	n/a
Comments:				
Signature:				

*A System inhibitor efficacy test is required on every annual service in accordance with the manufacturers' instructions and BS 7593. It is only acceptable to not have undertaken this if the service engineers attendance visit was in between annual services to attend a non-water facing component.

SERVICE/INTERIM WORK ON BOILER delete as appropriate			Date:	
Engineer name:		Company name:		
Telephone Nº:		Gas Safe registration Nº:		
Max rate	CO ppm	CO_2 %	CO/CO_2	
Min rate	CO ppm	CO_2 %	CO/CO_2	
Where possible, has a flue integrity check been undertaken in accordance with manufacturers' instructions, and readings are correct?"			yes	
Gas rate:	m^3/h	OR	ft^3/h	
Were parts fitted?delete as appropriate		Yes	No	
Parts fitted:				
System inhibitor concentration has been checked and appropriate action taken, in accordance with BS 7593 and boiler manufacturers' instructions. *			yes	n/a
Comments:				
Signature:				

*A System inhibitor efficacy test is required on every annual service in accordance with the manufacturers' instructions and BS 7593. It is only acceptable to not have undertaken this if the service engineers attendance visit was in between annual services to attend a non-water facing component.

SERVICE/INTERIM WORK ON BOILER delete as appropriate			Date:	
Engineer name:		Company name:		
Telephone Nº:		Gas Safe registration Nº:		
Max rate	CO ppm	CO_2 %	CO/CO_2	
Min rate	CO ppm	CO_2 %	CO/CO_2	
Where possible, has a flue integrity check been undertaken in accordance with manufacturers' instructions, and readings are correct?"			yes	
Gas rate:	m^3/h	OR	ft^3/h	
Were parts fitted?delete as appropriate		Yes	No	
Parts fitted:				
System inhibitor concentration has been checked and appropriate action taken, in accordance with BS 7593 and boiler manufacturers' instructions. *			yes	n/a
Comments:				
Signature:				

*A System inhibitor efficacy test is required on every annual service in accordance with the manufacturers' instructions and BS 7593. It is only acceptable to not have undertaken this if the service engineers attendance visit was in between annual services to attend a non-water facing component.

SERVICE/INTERIM WORK ON BOILER delete as appropriate			Date:	
Engineer name:		Company name:		
Telephone Nº:		Gas Safe registration Nº:		
Max rate	CO ppm	CO_2 %	CO/CO_2	
Min rate	CO ppm	CO_2 %	CO/CO_2	
Where possible, has a flue integrity check been undertaken in accordance with manufacturers' instructions, and readings are correct?"			yes	
Gas rate:	m^3/h	OR	ft^3/h	
Were parts fitted?delete as appropriate		Yes	No	
Parts fitted:				
System inhibitor concentration has been checked and appropriate action taken, in accordance with BS 7593 and boiler manufacturers' instructions. *			yes	n/a
Comments:				
Signature:				

*A System inhibitor efficacy test is required on every annual service in accordance with the manufacturers' instructions and BS 7593. It is only acceptable to not have undertaken this if the service engineers attendance visit was in between annual services to attend a non-water facing component.

SERVICE/INTERIM WORK ON BOILER delete as appropriate			Date:	
Engineer name:		Company name:		
Telephone Nº:		Gas Safe registration Nº:		
Max rate	CO ppm	CO_2 %	CO/CO_2	
Min rate	CO ppm	CO_2 %	CO/CO_2	
Where possible, has a flue integrity check been undertaken in accordance with manufacturers' instructions, and readings are correct?"			yes	
Gas rate:	m^3/h	OR	ft^3/h	
Were parts fitted?delete as appropriate		Yes	No	
Parts fitted:				
System inhibitor concentration has been checked and appropriate action taken, in accordance with BS 7593 and boiler manufacturers' instructions. *			yes	n/a
Comments:				
Signature:				

*A System inhibitor efficacy test is required on every annual service in accordance with the manufacturers' instructions and BS 7593. It is only acceptable to not have undertaken this if the service engineers attendance visit was in between annual services to attend a non-water facing component.

* All installations in England and Wales must be notified to Local Authority Building Control (LABC) either directly or through a Competent Persons Scheme. A Building Regulations Compliance Certificate will then be issued to the customer.

© Heating and Hotwater Industry Council (HHIC)

benchmark COLLECTIVE MARK
THE MARK OF QUALITY FOR THE INSTALLATION, COMMISSIONING AND SERVICING OF DOMESTIC HEATING AND HOT WATER SYSTEMS

www.centralheating.co.uk

14 Appendix

14.1 Product fiche - Combination boilers

Product fiche for combination boilers

Baxi 800 Combi 2		**824**	**830**	**836**
Space heating - Temperature application		Medium	Medium	Medium
Water heating - Declared load profile		XL	XL	XL
Seasonal space heating energy efficiency class		A	A	A
Water heating energy efficiency class		A	A	A
Rated heat output *(Prated or Psup)*	kW	20	25	25
Space heating - Annual energy consumption	kWh GJ	62	77	77
Water heating - Annual energy consumption	kWh GJ	16	16	16
Seasonal space heating energy efficiency	%	99.0	98.8	98.8
Water heating energy efficiency	%			
Sound power level L_{WA} indoors	dB	50	51	51

See

For specific precautions about assembling, installing and maintaining consult the relevant section as detailed on the Contents page.

14.2 Package fiche - boilers

Package fiche for boilers indicating the space heating energy efficiency of the package

Seasonal space heating energy efficiency of boiler

(1) ‘I’ [ ] %

Temperature control

from fiche of temperature control

Class I = 1%, Class II = 2%, Class III = 1.5%, Class IV = 2%, Class V = 3%, Class VI = 4%, Class VII = 3.5%, Class VIII = 5%

(2) + [ ] %

Supplementary boiler

from fiche of boiler

Seasonal space heating energy efficiency (in %)

(3) ([ ] - ‘I’) x 0.1 = ± [ ] %

Solar contribution

from fiche of solar device

Collector size (in m²) | Tank volume (in m³) | Collector efficiency (in %) | Tank rating (1): A* = 0.95, A = 0.91, B = 0.86, C = 0.83, D - G = 0.81

(4) (‘III’ x [ ] + ‘IV’ x [ ]) x 0.9 x ([ ] /100) x [ ] = + [ ] %

(1) If tank rating is above A, use 0.95

Supplementary heat pump

from fiche of heat pump

Seasonal space heating energy efficiency (in %)

(5) ([ ] - ‘I’) x ‘II’ = + [ ] %

Solar contribution AND Supplementary heat pump

select smaller value

(4) 0.5 x [ ] OR (5) 0.5 x [ ] = - (6) [ ] %

Seasonal space heating energy efficiency of package

(7) [ ] %

Seasonal space heating energy efficiency class of package

G	F	E	D	C	B	A	A+	A++	A+++
<30%	≥30%	≥34%	≥36%	≥75%	≥82%	≥90%	≥98%	≥125%	≥150%

Boiler and supplementary heat pump installed with low temperature heat emitters at 35°C ?

from fiche of heat pump

(7) [ ] + (50 x ‘II’) = [ ] %

The energy efficiency of the package of products provided for in this fiche may not correspond to its actual energy efficiency once installed in a building, as this efficiency is influenced by further factors such as heat loss in the distribution system and the dimensioning of the products in relation to building size and characteristics.

I The value of the seasonal space heating energy efficiency of the preferential space heater, expressed in %.

II The factor for weighting the heat output of preferential and supple mentary heaters of a package as set out in the following table.

III The value of the mathematical expression: 294/(11 · Prated), whereby ‘Prated’ is related to the preferential space heater.

IV The value of the mathematical expression 115/(11 · Prated), whereby ‘Prated’ is related to the preferential space heater.

Weighting of boilers

Psup / (Prated + Psup)(1)(2)	II, package without hot water storage tank	II, package with hot water storage tank
0	0	0
0.1	0.3	0.37
0.2	0.55	0.70
0.3	0.75	0.85
0.4	0.85	0.94
0.5	0.95	0.98
0.6	0.98	1.00
≥ 0.7	1.00	1.00

(1) The intermediate values are calculated by linear interpolation between the two adjacent values.
(2) Prated is related to the preferential space heater or combination heater.

Package efficiency

Baxi 800 Combi 2		**824**	**830**	**836**
Temperature control X	%			
Temperature control Y	%			

14.3 Package fiche - Combination heaters (boilers or heat pumps)

Package fiche for combination heaters (boilers or heat pumps) indicating the water heating energy efficiency of the package

Water heating energy efficiency of combination heater

(1) ‘I’ ☐ %

Declared load profile: ☐

Solar contribution

from fiche of solar device

Auxiliary electricity

(2) **(1.1 x ‘I’ - 10%) x ‘II’ - ‘III’ - ‘I’ = +** ☐ %

Water heating energy efficiency of package under average climate

(3) ☐ %

Water heating energy efficiency class of package under average climate

	G	F	E	D	C	B	A	A+	A++	A+++
M	<27%	≥27%	≥30%	≥33%	≥36%	≥39%	≥65%	≥100%	≥130%	≥163%
L	<27%	≥27%	≥30%	≥34%	≥37%	≥50%	≥75%	≥115%	≥150%	≥188%
XL	<27%	≥27%	≥30%	≥35%	≥38%	≥55%	≥80%	≥123%	≥160%	≥200%
XXL	<28%	≥28%	≥32%	≥36%	≥40%	≥60%	≥85%	≥131%	≥170%	≥213%

Water heating energy efficiency under colder and warmer climate conditions

Colder: (3) ☐ **- 0.2 x** (2) ☐ **=** ☐ %

Warmer: (3) ☐ **+ 0.4 x** (2) ☐ **=** ☐ %

The energy efficiency of the package of products provided for in this fiche may not correspond to its actual energy efficiency once installed in a building, as this efficiency is influenced by further factors such as heat loss in the distribution system and the dimensioning of the products in relation to building size and characteristics.

I The value of the water heating energy efficiency of the combination heater, expressed in %.

II The value of the mathematical expression $(220 \cdot Q_{ref})/Q_{nonsol}$, where Q_{ref} is taken from Regulation EU 811/2013, Annex VII Table 15 and Q_{nonsol} from the product fiche of the solar device for the de clared load profile M, L, XL or XXL of the combination heater.

III The value of the mathematical expression $(Q_{aux} \cdot 2{,}5)/(220 \cdot Q_{ref})$, expressed in %, where Q_{aux} is taken from the product fiche of the solar device and Q_{ref} from Regulation EU 811/2013, Annex VII Ta ble 15 for the declared load profile M, L, XL or XXL.

Baxi Customer Support

0344 871 1545

Opening hours

Monday - Friday, 8.00am-6.00pm

Weekends and Bank Holidays, 8.30am-2.00pm

Please note calls may be recorded for training and monitoring purposes

baxi.co.uk

Register now to activate your warranty:

www.baxi.co.uk/registration

For the warranty to be maintained, please make sure...

1. Benchmark checklist is completed
2. Warranty is registered within 30 days
3. The boiler has an annual service

For full terms and conditions, visit www.baxi.co.uk/terms. Failure to adhere to terms and conditions will void your manufacturer's warranty.

Baxi
Brooks House,
Coventry Road,
Warwick, CV34 4LL

UK CA 0086

CE 0085

benchmark COLLECTIVE MARK
THE MARK OF QUALITY FOR THE INSTALLATION, COMMISSIONING AND SERVICING OF DOMESTIC HEATING AND HOT WATER SYSTEMS

Please ensure the boiler is installed in accordance with these installation instructions and that you adhere to the Building Regulations.

e&oe
All descriptions and illustrations provided in this document have been carefully prepared but we reserve the right to make changes and improvements in our products which may affect the accuracy of the information contained in this leaflet. All goods are sold subject to our standard Conditions of Sale which are available on request.

BAXI

© Copyright

All technical and technological information contained in these technical instructions, as well as any drawings and technical descriptions supplied, remain our property and shall not be multiplied without our prior consent in writing. Subject to alterations.